Georgia Tech
ACTS Propagation Experiment

Status Report

Prepared by: D. H. Howard and P. G. Steffes (Principal Investigators) and M. S. Alouini, S. A. Borgsmiller, D. J. Collins, and M. A. Hoover

Presented by: P. G. Steffes and S. A. Borgsmiller

Presented to: NAPEX XIX and Seventh ACTS Propagation Studies Workshop - (APSW VII) Fort Collins, CO

Date: 15 June 1995

GT ACTS Experiment Phases

- **Phase I : Terminal and link RF Measurements:**
  - CW/swept CW, noise, PSK, SBM modulations used for typical end-to-end link characterization measurements:
    - Clear air/inclement weather
    - Phase iitter as key measurement
- **Phase II : CDMA Measurements**
  - Use lab equipment to generate CDMA test signal with background CDMA traffic:
  - Build code CDMA receiver for BER measurements
    - Use spectrum analyzer and digital waveform capture for signal snapshots, cross-correlation measurements
    - Scintillation effects on CDMA as key point of interest

Schedule/Milestones

Develop and Test RF Terminal	Completed, May 95
Phase I Measurements	May 95 - Jul 95
Develop and Test CDMA Modem	Completed, May 95
Integrate CDMA/RF Terminal and Weather Station	Jun 95 - Jul 95
Phase II Measurements	Aug 95 - Oct 95
Additional Measurements	Nov 95
Final Report and Data Archiving	Nov/Dec 95

Georgia Tech RESEARCH INSTITUTE — Information Technology and Telecommunications Laboratory — Georgia Tech School of Electrical and Computer Engineering

3

Transmitter/Receiver Configuration

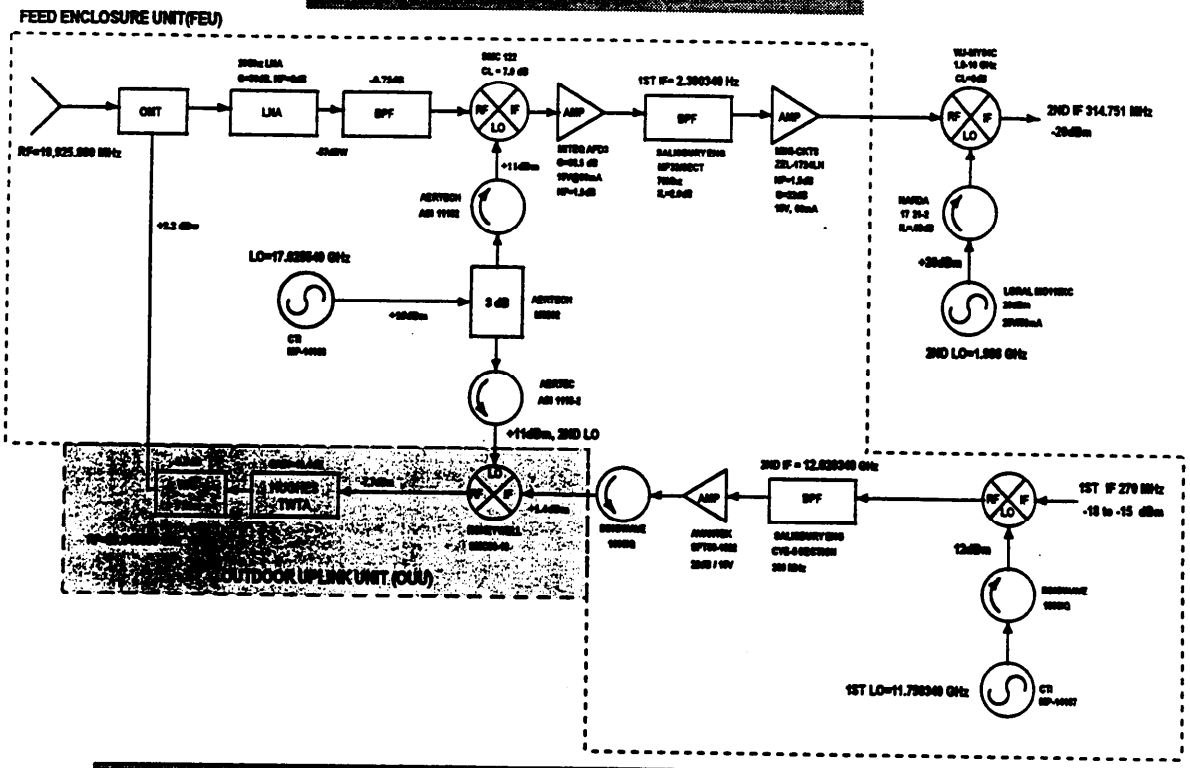

Georgia Tech — Georgia Tech

4

Georgia Tech NASA ACTS RF Measurements Block Diagram

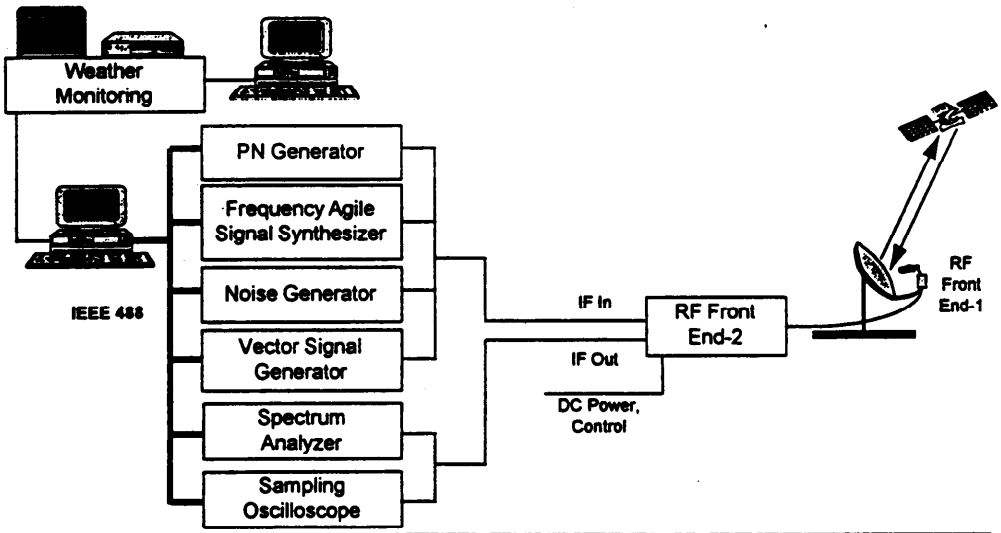

Georgia Tech RESEARCH INSTITUTE — Information Technology and Telecommunications Laboratory — Georgia Tech School of Electrical and Computer Engineering

5

SIGNAL PROCESSING SYSTEM FOR DETERMINATION OF AMPLITUDE FLUCTUATION AND PHASE NOISE

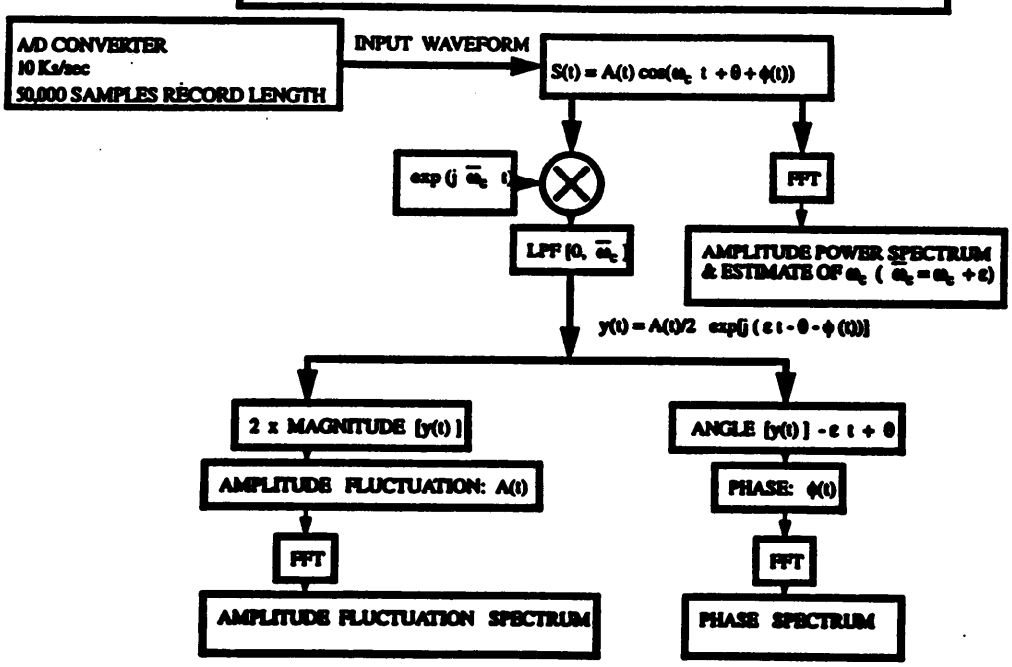

Georgia Tech RESEARCH INSTITUTE — Information Technology and Telecommunications Laboratory — Georgia Tech School of Electrical and Computer Engineering

6

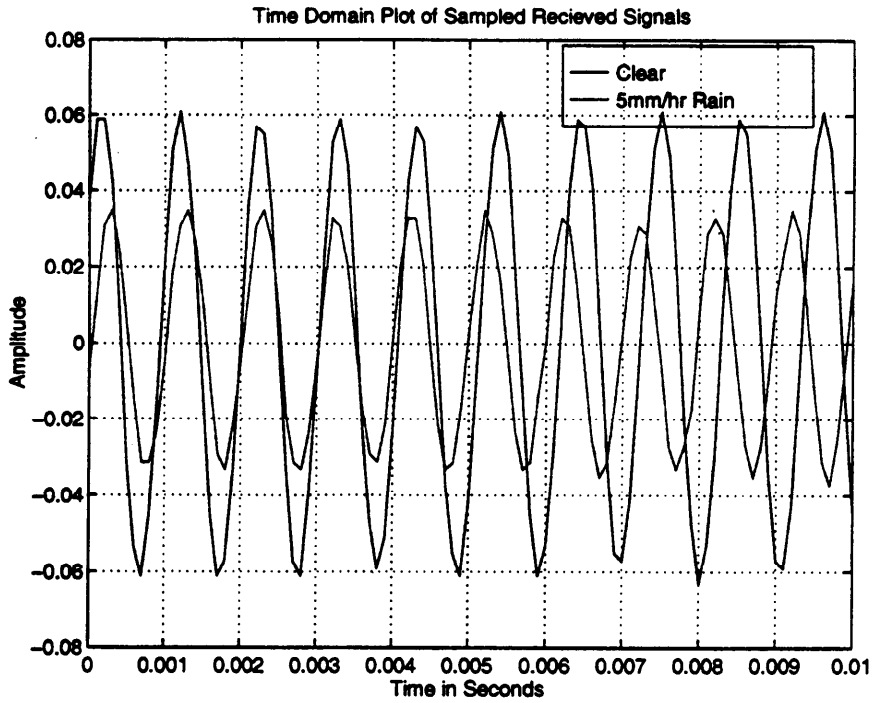
Time Domain Plot of Sampled Recieved Signals
Clear
5mm/hr Rain
Amplitude
0.08
0.06
0.04
0.02
0
-0.02
-0.04
-0.06
-0.08
0
0.001
0.002
0.003
0.004
0.005
0.006
0.007
0.008
0.009
0.01
Time in Seconds

7

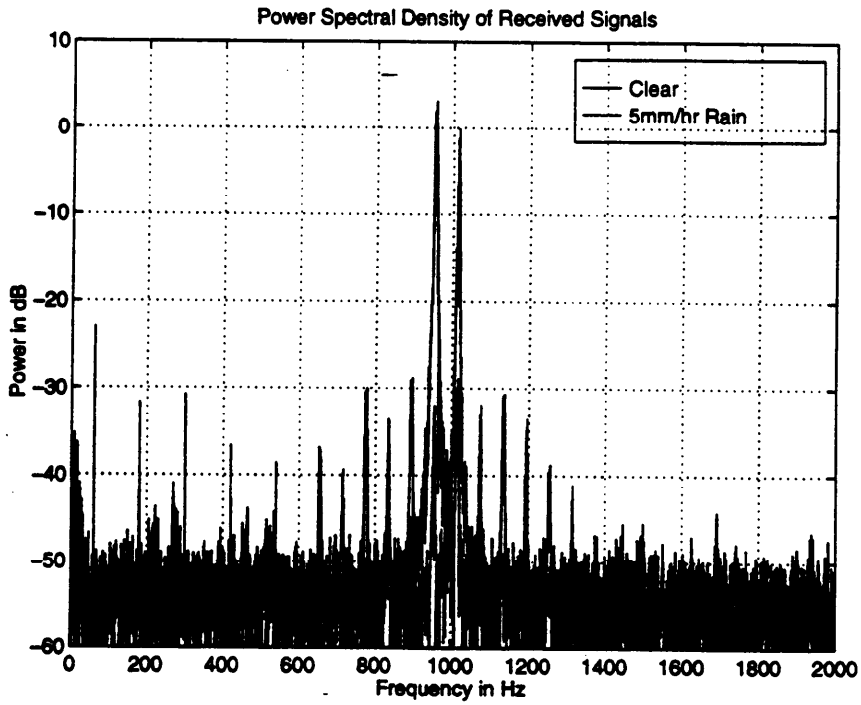
Power Spectral Density of Received Signals
Clear
5mm/hr Rain
Power in dB
10
0
-10
-20
-30
-40
-50
-60
0
200
400
600
800
1000
1200
1400
1600
1800
2000
Frequency in Hz

8

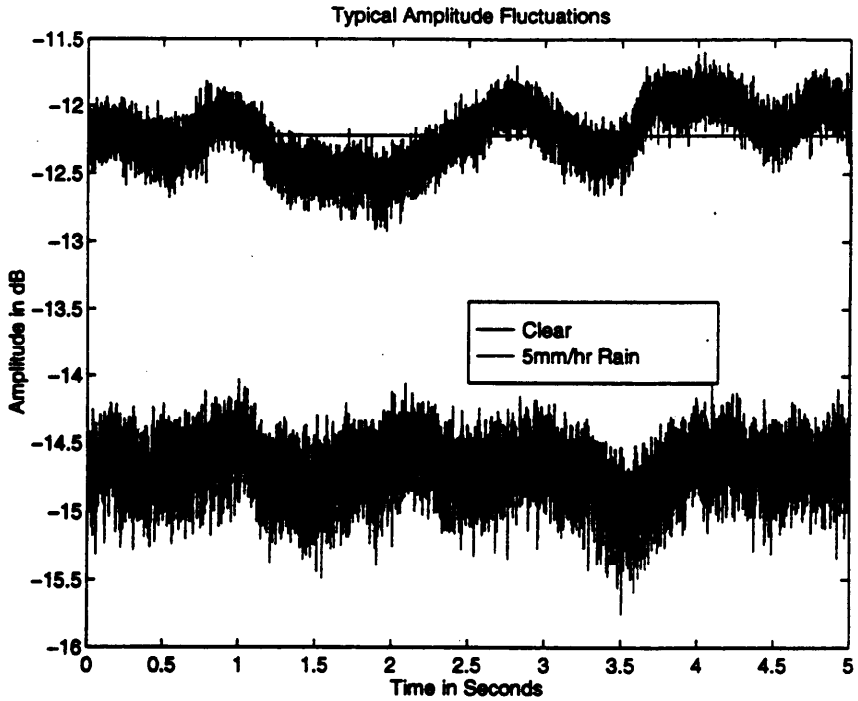
Typical Amplitude Fluctuations
Amplitude in dB
Time in Seconds
Clear
5mm/hr Rain
-11.5
-12
-12.5
-13
-13.5
-14
-14.5
-15
-15.5
-16
0
0.5
1
1.5
2
2.5
3
3.5
4
4.5
5

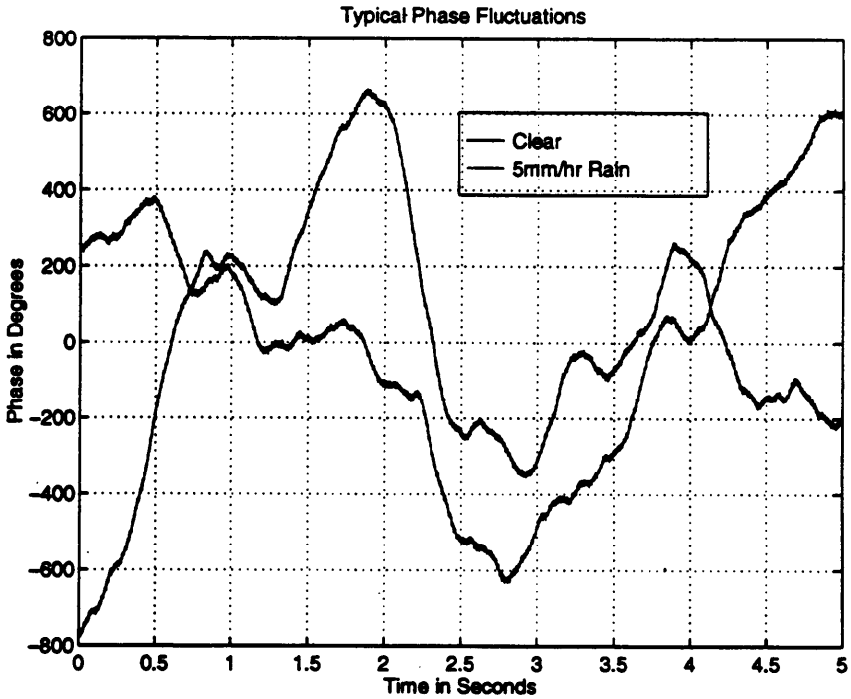
Typical Phase Fluctuations
Phase in Degrees
Time in Seconds
Clear
5mm/hr Rain
800
600
400
200
0
-200
-400
-600
-800
0
0.5
1
1.5
2
2.5
3
3.5
4
4.5
5

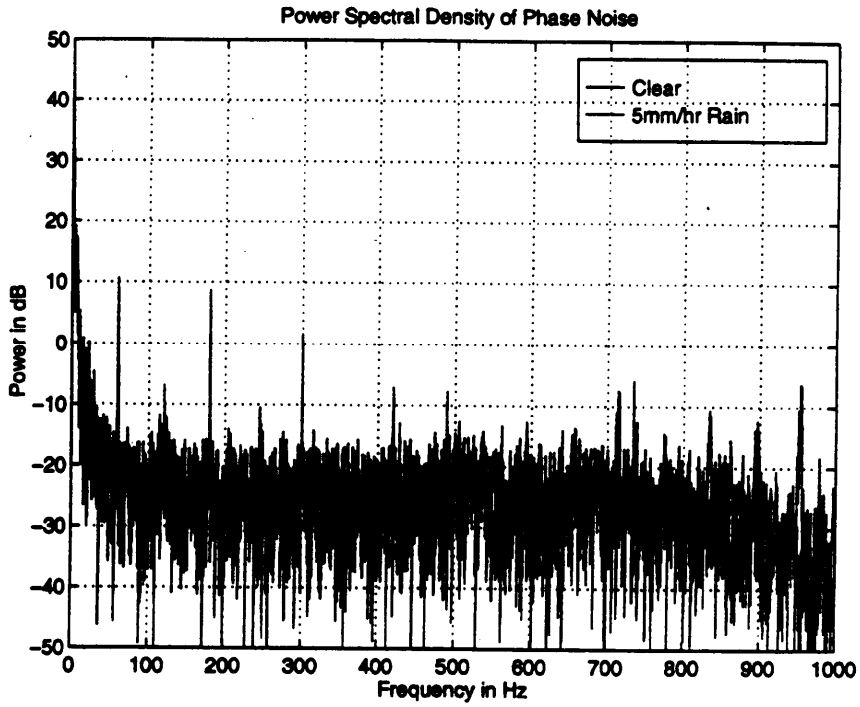

11

RF Measurements Conducted During Phase I

- BER vs. Eb/No for selected digital modulations (underway)
- Amplitude response vs. frequency (complete)
- Group delay vs. frequency
- Pulse parameters (rise time, fall time, distortion, etc.)
- CNR degradation (complete)
- Intermodulation and spurious signal response (complete)
- Eye/vector/constellation diagrams for selected digital modulations (underway)
- Others TBD

Georgia Tech RESEARCH INSTITUTE — Information Technology and Telecommunications Laboratory — Georgia Tech School of Electrical and Computer Engineering

12

Automated Weather Station

- Based around Davis Instruments Weather Monitor II weather station
  - Automatically records a wide variety of weather data:
    - Temperature
    - Wind Speed
    - Wind Direction
    - Humidity
    - Barometric Pressure
    - Rainfall Rate
    - Rainfall Accumulation
    - Dew Point
- Interfaces to IBM-compatible PC for data storage and analysis
- Also recording video of Doppler radar from local television

CDMA Receiver

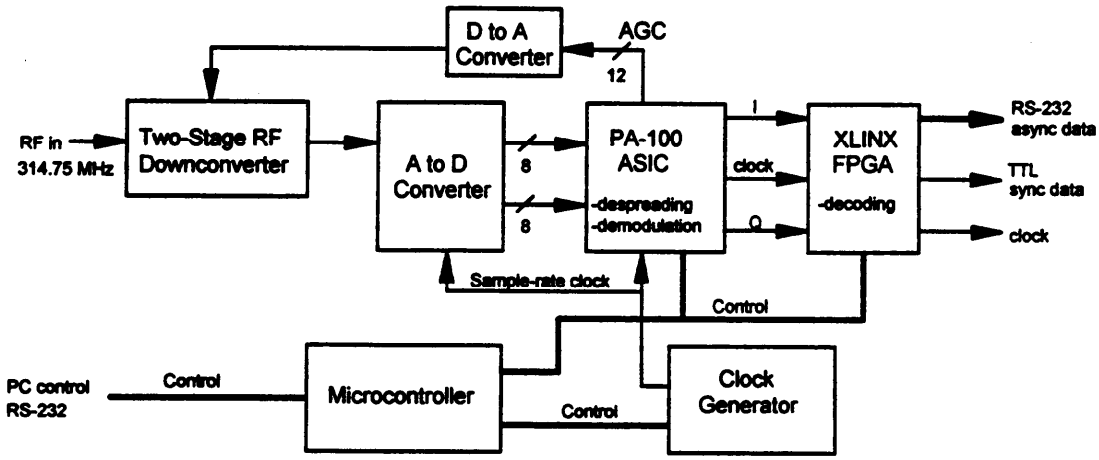

CDMA Modulator

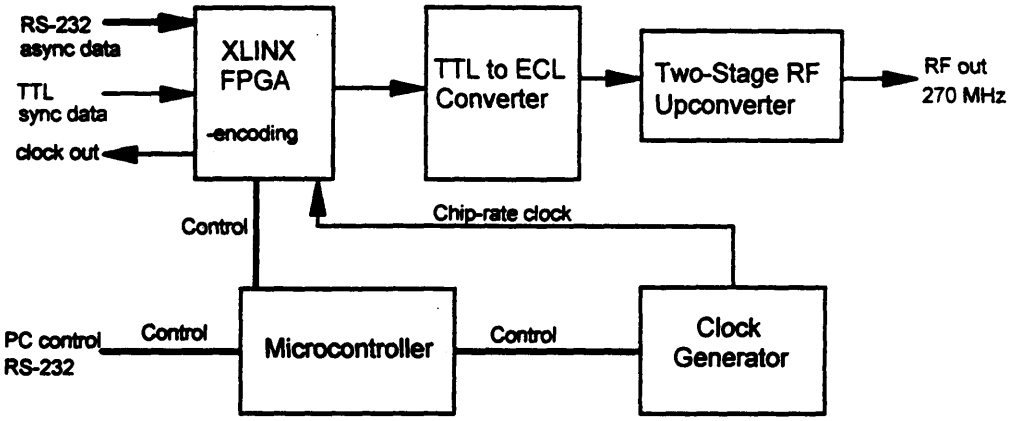

Modem Spectrum
Output Spread at 8 Mcps

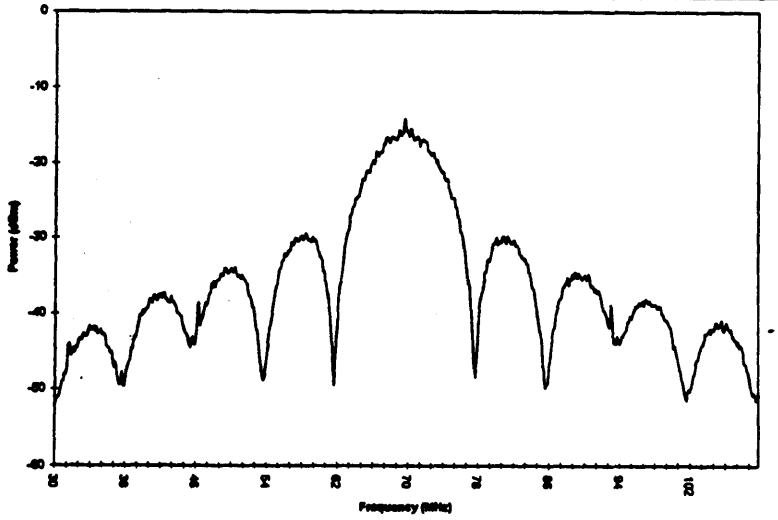

Modem Spectrum
Output Spread at 32 Mcps

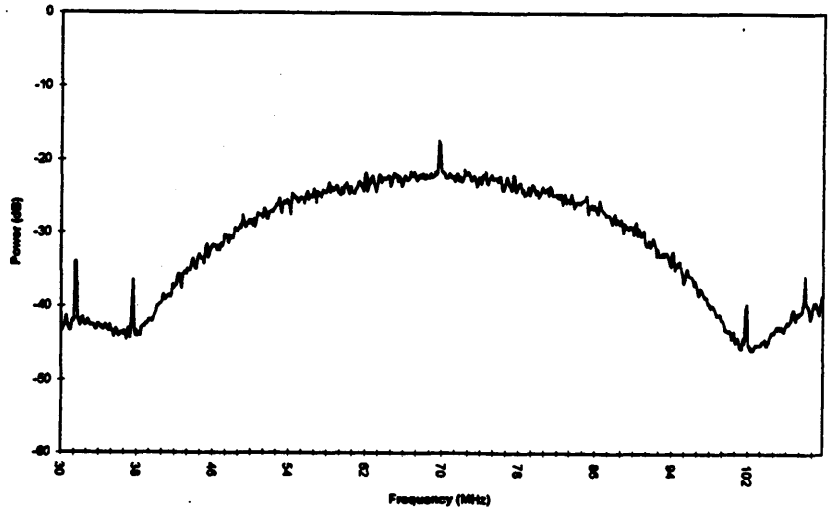

Georgia Tech RESEARCH INSTITUTE — Information Technology and Telecommunications Laboratory — Georgia Tech School of Electrical and Computer Engineering

17