Chapter 2
Coupled Oscillator Arrays – Basic Analytical Description and Operating Principles

In this chaper we will show how to use the theory developed in Chapter 1 to mathematically describe a linear array of oscillators coupled to nearest neighbors. It was Karl Stephan who first showed that such arrays can be useful in providing excitation signals for a linear array of radiating elements in that if locking signals are injected into the end oscillators of the array, variation of the relative phase of the locking signals can be used to control the distribution of the phase of the signals across the array [1]. Later, Liao and York pointed out that by merely tuning the end oscillators of the array the phase distribution can be controlled without any external injection signals [28]. We will show that, while the equations and associated boundary conditions at the array ends can describe the nonlinear behavior of the array through numerical solution, if the inter-oscillator phase differences remain small, the equations may be linearized. The linearized version may be solved analytically for the dynamic behavior of the phase, and from this one may obtain the dynamic behavior of the beam radiated by the elements of this linear phased array antenna.

An important consideration in the analysis is the manner in which the oscillators are coupled. The coupling can be represented as a "coupling network" connected to the array of oscillators, and this network can be

described in terms of its port characteristics; that is, in terms of its admittance matrix or its scattering matrix.

The above theoretical description will then be generalized to planar arrays of oscillators coupled to nearest neighbors and the phase dynamics obtained by solution of the resulting equations. Here again, the coupling can be described in terms of port characteristics.

2.1 Fundamental Equations

Recall that two oscillators coupled together as symbolized in Fig. 2-1 were described by Eqs. (1.4-1) and (1.4-2). We now consider the generalization to $2N+1$ oscillators shown in Fig. 2-2. The generalization of Eqs. (1.4-1) and (1.4-2) is,

$$\begin{aligned}\frac{d\theta_i}{dt} &= \omega_{0i} + \Delta\omega_{lock}\sin\left(\theta_{i+1} - \theta_i - \Phi_{i,i+1}\right) \\ &\quad + \Delta\omega_{lock}\sin\left(\theta_{i-1} - \theta_i - \Phi_{i,i-1}\right)\end{aligned} \tag{2.1-1}$$

where i is an integer index that identifies each oscillator and runs from $-N$ to N. We choose the number of oscillators to be odd so that there will be a center oscillator. This is not really necessary as the theory can be adapted to an even number of oscillators also. (A simple artifice for accomplishing this is to generalize N to half of an odd integer value so that $2N+1$ becomes an even number and let the index, i, take on only half integer values from $-N/2$ to $N/2$ with unit increments.)

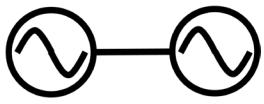

Fig. 2-1. Two coupled oscillators.

Fig. 2-2. 2*N* + 1 coupled oscillators.

However, from a practical point of view, it is convenient to have a center point at which to inject an external signal from a stable oscillator for the purpose of stabilizing the array oscillation. We therefore select the number to be odd. Note that, because the end oscillators are coupled to only one other oscillator, they are described by differential equations with only one sine term on the right side; that is,

$$\frac{d\theta_{-N}}{dt} = \omega_{0N} + \Delta\omega_{lock} \sin\left(\theta_{-N+1} - \theta_{-N} - \Phi_{-N,-N+1}\right) \qquad (2.1\text{-}2)$$

$$\frac{d\theta_{N}}{dt} = \omega_{0N} + \Delta\omega_{lock} \sin\left(\theta_{N-1} - \theta_{N} - \Phi_{N,N-1}\right) \qquad (2.1\text{-}3)$$

Note further that, because the maximum magnitude of the sine function is unity, the end oscillators of the array can be detuned from their nearest neighbors by a maximum of one locking range without losing lock whereas the center oscillator can be detuned up to two locking ranges. The maximum permitted detuning of the other oscillators will lie between one and two locking ranges. (See Section3.1, Eq. (3.1-35).)

This system of simultaneous nonlinear first-order differential equations, (2.1-1)—(2.1-3), can be solved numerically beginning with an initial phase distribution and oscillator tuning thus providing the phase distribution at all subsequent times. However, numerical solution does not provide an intuitive grasp of the behavior and how the parameters affect it. This intuitive understanding may be more easily gleaned from an approximate analytic solution. Then, later, if a more exact result is needed, the numerical approach can be applied.

Before proceeding to solve Eqs. (2.1-1) to (2.1-3) by linearization, we remark that the oscillator tuning required to produce a desired steady-state phase distribution may be easily obtained from these equations. That is, in steady state the time derivatives are zero, and from (2.1-1) to (2.1-3) the oscillator tuning is merely,

$$\begin{aligned} \omega_{0i} - \omega_{ref} &= -\Delta\omega_{lock} \sin\left(\varphi_{i+1} - \varphi_i - \Phi_{i,i+1}\right) \\ &\quad - \Delta\omega_{lock} \sin\left(\varphi_{i-1} - \varphi_i - \Phi_{i,i-1}\right) \end{aligned} \qquad (2.1\text{-}4)$$

$$\omega_{0,-N} - \omega_{ref} = -\Delta\omega_{lock} \sin\left(\varphi_{-N+1} - \varphi_{-N} - \Phi_{-N,-N+1}\right) \qquad (2.1\text{-}5)$$

$$\omega_{0N} - \omega_{ref} = -\Delta\omega_{lock} \sin\left(\varphi_{N-1} - \varphi_N - \Phi_{N,N-1}\right) \tag{2.1-6}$$

where we have defined a new phase variable via,

$$\theta_i = \varphi_i + \omega_{ref} t \tag{2.1-7}$$

and ω_{ref} is taken to be the ensemble frequency of the array.

Let us assume for the moment that the coupling phases are a multiple of π, and sum (2.1-4)–(2.1-6) over the 2N+1 array elements. We find that under this assumption,

$$\begin{aligned} &\sum_{i=-N}^{N} \omega_{0i} - N\omega_{ref} = \\ &-\Delta\omega_{lock} \sum_{i=-N+1}^{N-1} \sin\left(\varphi_{i+1} - \varphi_i - \Phi\right) + \sin\left(\varphi_{i-1} - \varphi_i - \Phi\right) \\ &\quad - \Delta\omega_{lock} \sin\left(\varphi_{N-1} - \varphi_N - \Phi\right) - \Delta\omega_{lock} \sin\left(\varphi_{-N-1} - \varphi_{-N} - \Phi\right) = 0 \end{aligned} \tag{2.1-8}$$

so that,

$$\omega_{ref} = \frac{1}{N} \sum_{i=-N}^{N} \omega_{0i} \tag{2.1-9}$$

the average of the free-running frequencies. Thus, we have shown that *for coupling phase equal to a multiple of π, the ensemble frequency of the array is the average of the free running frequencies of the oscillators*.

As an example, in an array with zero coupling phase, a linear phase distribution with an inter-oscillator phase difference of $\delta\varphi$ requires,

$$\omega_{0i} - \omega_{ref} = 0 \tag{2.1-10}$$

$$\omega_{0,-N} - \omega_{ref} = -\Delta\omega_{lock} \sin\left(\delta\varphi\right) \tag{2.1-11}$$

$$\omega_{0N} - \omega_{ref} = \Delta\omega_{lock} \sin\left(\delta\varphi\right) \tag{2.1-12}$$

Thus, beginning with all the oscillators tuned to the reference frequency, tuning the leftmost oscillator down in frequency by half of the locking range and tuning the rightmost oscillator up in frequency by half of the locking range will produce a phase distribution across the array with a positive slope of $\pi/6$ radians between oscillators, $\pi/6$ being the arcsine of 1/2. If the oscillator outputs are used to excite radiating elements spaced a half wavelength (π radians) apart, the radiated beam will be directed 9.6 deg from normal to the array, that is, the arcsine of 1/6. It is this method of beam-steering that was first described by Liao and York. [28] Of course, much more general phase distributions are possible and the required oscillator tunings to produce them are given by Eqs. (2.1-4)–(2.1-6).

2.2 Discrete Model Solution (Linearization and Laplace Transformation)

In order to render the analytic solution tractable, we assume that the arguments of the sine functions in Eqs. (2.1-1)–(2.1-2) are close to an integral multiple of 2π. Specifically, we will assume that the coupling phase is zero and that the inter-oscillator phase differences are small so that the sine functions can be approximated by their arguments. In this approximation, Eq. (2.1-1) becomes,

$$\frac{d\theta_i}{dt} = \omega_{0i} + \Delta\omega_{lock}\left(\theta_{i+1} - 2\theta_i + \theta_{i-1}\right) \tag{2.2-1}$$

Similarly, Eqs. (2.1-2) and (2.1-3) become,

$$\frac{d\theta_{-N}}{dt} = \omega_{0,-N} + \Delta\omega_{lock}\left(\theta_{-N+1} - \theta_{-N}\right) \tag{2.2-2}$$

$$\frac{d\theta_N}{dt} = \omega_{0N} + \Delta\omega_{lock}\left(\theta_{N-1} - \theta_N\right) \tag{2.2-3}$$

Note that these approximate linearized equations would seem to imply that the end oscillators of the array can be detuned by $\pi/2$ locking ranges and the center one can be detuned by π locking ranges and still remain locked because the phase differences between oscillators remain less than or equal to $\pi/2$. However, from the full nonlinear theory of Section 2.1, we know that this is actually not true. These linearized equations only apply when the phase differences are small so that the sine functions may be accurately replaced by their arguments and $\pi/2$ is certainly not a small value in this sense.

In terms of the new phase, Eq. (2.1-7), we find that Eqs. (2.2-1)–(2.2-3) become,

$$\frac{d\varphi_i}{dt} = \omega_{0i} - \omega_{ref} + \Delta\omega_{lock}\left(\varphi_{i+1} - 2\varphi_i + \varphi_{i-1}\right) \tag{2.2-4}$$

$$\frac{d\varphi_{-N}}{dt} = \omega_{0,-N} - \omega_{ref} + \Delta\omega_{lock}\left(\varphi_{-N+1} - \varphi_{-N}\right) \tag{2.2-5}$$

$$\frac{d\varphi_N}{dt} = \omega_{0N} - \omega_{ref} + \Delta\omega_{lock}\left(\varphi_{N-1} - \varphi_N\right) \tag{2.2-6}$$

Now we have a system of first-order linear differential equations that describe the dynamic behavior of the oscillator array. Unlike the system of first-order nonlinear differential equations from which it was derived, this system can be solved analytically.

We begin by writing these linear equations, Eqs. (2.2-4)–(2.2-6), in matrix form,

$$\frac{d[\varphi]}{dt} = [\omega_0] - [\omega_{ref}] + \Delta\omega_{lock}[M][\varphi] \tag{2.2-7}$$

where $[\varphi]$ is a 2N+1 element vector of oscillator phases, $[\omega_0]$ is a similar vector of oscillator free-running frequencies, and $[M]$ is a (2N+1) by (2N+1) tridiagonal matrix with –2's on the diagonal, except for the –1's in the upper left and lower right corners, and 1's on the first super and sub diagonals. Dividing by $\Delta\omega_{lock}$ yields,

$$\frac{d[\varphi]}{d\tau} = [\Delta\Omega_{tune}] + [M][\varphi] \tag{2.2-8}$$

where $\tau = \Delta\omega_{lock}t$ and $[\Delta\Omega_{tune}] = \left[\frac{\omega_{0i} - \omega_{ref}}{\Delta\omega_{lock}}\right]$, a vector of oscillator free running frequencies relative to the reference frequency (detuning frequencies). Laplace transformation with respect to τ gives,

$$[s[I] - [M]][\tilde{\varphi}] = [\Delta\tilde{\Omega}_{tune}] \tag{2.2-9}$$

with the tildes indicating transformed quantities and with $[I]$ being the identity matrix. We now define eigenvectors, $[v]_n$, and eigenvalues, λ_n , of the matrix $[M]$ to be such that,

$$[M]][v]_n = \lambda_n[v]_n \tag{2.2-10}$$

Our intention is to express the solution of Eq. (2.2-9) as a sum of these eigenvectors with unknown coefficients. When this sum is substituted into Eq. (2.2-9), the orthogonality of the eigenvectors will be employed to determine the coefficients of the expansion and thus obtain the solution in series form. Since the number of eigenvectors is finite, this series will be a finite sum; that is, a closed form. Moreover, as we will see in the next section, in steady state, an approximation of this sum may be carried out to produce a simple functional form for the phase distribution.

Note that Eq. (2.2-10) is a three term recurrence relation for the elements of the eigenvectors, v_i; that is,

$$v_{i-1} - (2 + \lambda_n)v_i + v_{i+1} = 0 \tag{2.2-11}$$

with the two auxiliary conditions,

$$v_{N-1} - (1 + \lambda_n)v_N = 0 \tag{2.2-12}$$

$$v_{-N+1} - (1 + \lambda_n)v_{-N} = 0 \tag{2.2-13}$$

Now, Eq. (2.2-11) is satisfied by the Chebyshev polynomials, $T_i(x_n)$ and $U_i(x_n)$, where,

$$x_n = \frac{2 + \lambda_n}{2} \tag{2.2-14}$$

so that Eqs. (2.2-12) and (2.2-13) become,

$$W_{N-1}(x_n) - (2x_n - 1)W_N(x_n) = 0 \tag{2.2-15}$$

$$W_{-N+1}(x_n) - (2x_n - 1)W_{-N}(x_n) = 0 \tag{2.2-16}$$

where W_i is a linear combination of T_i and U_{i-1}. Equivalently, using (2.2-11) we have,

$$W_{N+1}(x_n) - W_N(x_n) = 0 \tag{2.2-17}$$

$$W_{-N-1}(x_n) - W_{-N}(x_n) = 0 \tag{2.2-18}$$

These boundary condition equations determine the permissible values, x_n. Let

$$W_i(x_n) = \alpha_T T_i(x_n) + \alpha_U U_{i-1}(x_n) \tag{2.2-19}$$

so that

$$W_{-i}(x_n) = \alpha_T T_i(x_n) - \alpha_U U_{i-1}(x_n) \tag{2.2-20}$$

Adding and subtracting Eqs. (2.2-17) and (2.2-18) using Eqs. (2.2-19) and (2.2-20) yields,

$$T_{N+1}(x_n) - T_N(x_n) = 0 \tag{2.2-21}$$

$$U_N(x_n) - U_{N-1}(x_n) = 0 \tag{2.2-22}$$

Using the trigonometric expression for T, Eq. (2.2-21) yields,

$$\sin\left(\left(N + \frac{1}{2}\right)\cos^{-1}(x_n)\right)\sin\left(\frac{1}{2}\cos^{-1}(x_n)\right) = 0 \tag{2.2-23}$$

which implies that,

$$x_{Tn} = \cos\left(\frac{2n\pi}{(2N+1)}\right) \tag{2.2-24}$$

so that the eigenvalues are given by,

$$\lambda_{Tn} = 2\cos\left(\frac{2n\pi}{(2N+1)}\right) - 2 = -4\sin^2\left(\frac{n\pi}{(2N+1)}\right) \tag{2.2-25}$$

the subscript T indicating that the elements of the corresponding eigenvectors are $T_i(x_n)$. Conversely, using the trigonometric expression for U, Eq. (2.2-22) yields,

$$\cos\left(\left(N + \frac{1}{2}\right)\cos^{-1}(x_n)\right) = 0 \tag{2.2-26}$$

which implies that,

$$x_{Un} = \cos\left(\frac{(2n+1)\pi}{(2N+1)}\right) \tag{2.2-27}$$

so that the eigenvalues are given by,

$$\lambda_{Un} = 2\cos\left(\frac{(2n+1)\pi}{(2N+1)}\right) - 2 = -4\sin^2\left(\frac{(2n+1)\pi/2}{(2N+1)}\right) \quad (2.2\text{-}28)$$

the subscript U indicating that the elements of the corresponding eigenvectors are $U_{i-1}(x_n)$. In (2.2-25) and (2.2-28) the index n runs from 0 to N after which the eigenvalues repeat. Thus, we have arrived at two sets of eigenfunctions, one set, the *T's*, excited by the symmetric part of the detuning function and the other set, the *U's*, excited by the antisymmetric part, with respect to the array center.

We may now expand the solution of Eq. (2.2-9) in these eigenvectors as,

$$[\tilde{\varphi}] = \sum_{n=0}^{N} A_n[v_T]_n + B_n[v_U]_n \quad (2.2\text{-}29)$$

Substituting this expansion into Eq. (2.2-9), we obtain,

$$\begin{aligned} &[s[I]-[M]]\sum_{n=0}^{N} A_n[v_T]_n + B_n[v_U]_n = \\ &\sum_{n=0}^{N} A_n(s-\lambda_{Tn})[v_T]_n + B_n(s-\lambda_{Un})[v_U]_n = [\Delta\tilde{\Omega}_{tune}] \end{aligned} \quad (2.2\text{-}30)$$

Using the orthogonality of the eigenvectors, we may now solve for the coefficients A_n and B_n.

$$A_n = \frac{[\Delta\tilde{\Omega}_{tune}]\bullet[v_T]_n}{(s-\lambda_{Tn})[v_T]_n \bullet [v_T]_n} \quad (2.2\text{-}31)$$

$$B_n = \frac{[\Delta\tilde{\Omega}_{tune}]\bullet[v_U]_n}{(s-\lambda_{Un})[v_U]_n \bullet [v_U]_n} \quad (2.2\text{-}32)$$

Substituting into Eq. (2.2-29),

$$[\tilde{\varphi}] = \sum_{n=0}^{N} \frac{[\Delta\tilde{\Omega}_{tune}] \bullet [v_T]_n}{(s-\lambda_{Tn})[v_T]_n \bullet [v_T]_n} [v_T]_n + \sum_{n=0}^{N} \frac{[\Delta\tilde{\Omega}_{tune}] \bullet [v_U]_n}{(s-\lambda_{Un})[v_U]_n \bullet [v_U]_n} [v_U]_n \tag{2.2-33}$$

and, if the detuning function is a step function at time zero, the inverse Laplace transform is,

$$[\varphi] = \frac{\tau}{2N+1} \sum_{i=-N}^{N} \Delta\Omega_{tune,i} - \sum_{n=1}^{N} \frac{[\Delta\Omega_{tune}] \bullet [v_T]_n}{\lambda_{Tn}[v_T]_n \bullet [v_T]_n} [v_T]_n \left(1 - e^{\lambda_{Tn}\tau}\right) - \sum_{n=0}^{N} \frac{[\Delta\Omega_{tune}] \bullet [v_U]_n}{\lambda_{Un}[v_U]_n \bullet [v_U]_n} [v_U]_n \left(1 - e^{\lambda_{Un}\tau}\right) \tag{2.2-34}$$

The first of the three summations, the one arising from the zero eigenvalue, indicates that *the steady-state ensemble frequency of the array is shifted by the average oscillator detuning*; i.e., the sum of the elements of the $[\Delta\Omega_{tune}]$ vector divided by the number of oscillators.

Recall that we assumed at the start of this section that the coupling phase is zero. Returning for a moment to Eq. (2.1-1) and using Eq. (2.1-7), we may write,

$$\frac{d\varphi_i}{dt} = \omega_{0i} - \omega_{ref} + \Delta\omega_{lock} \sin\left(\varphi_{i+1} - \varphi_i - \Phi_{i,i+1}\right) + \Delta\omega_{lock} \sin\left(\varphi_{i-1} - \varphi_i - \Phi_{i,i-1}\right) \tag{2.2-35}$$

If the coupling phases are taken to be equal, this can be rearranged to read,

$$\frac{d\varphi_i}{dt} = \left(\omega_{0i} - \omega_{ref}\right) - \Delta\omega_{lock} \sin(\Phi)\left[\cos\left(\varphi_{i+1} - \varphi_i\right) + \cos\left(\varphi_{i-1} - \varphi_i\right)\right] + \Delta\omega_{lock} \cos(\Phi)\left[\sin\left(\varphi_{i+1} - \varphi_i\right) + \sin\left(\varphi_{i-1} - \varphi_i\right)\right] \tag{2.2-36}$$

or,

$$\frac{d\varphi_i}{dt} = \left(\omega_{0i} - \bar{\omega}_{ref}\right) + \Delta\omega_{eff}\left[\sin\left(\varphi_{i+1} - \varphi_i\right) + \sin\left(\varphi_{i-1} - \varphi_i\right)\right] \quad (2.2\text{-}37)$$

where,

$$\bar{\omega}_{ref} = \omega_{ref} + \Delta\omega_{lock}\sin\left(\Phi\right)\left[\cos\left(\varphi_{i+1} - \varphi_i\right) + \cos\left(\varphi_{i-1} - \varphi_i\right)\right] \quad (2.2\text{-}38)$$

and

$$\Delta\omega_{eff} = \Delta\omega_{lock}\cos\left(\Phi\right) \quad (2.2\text{-}39)$$

which is the same as Eq. (1.4-18). Thus we conclude that, in a 2N+1 oscillator array, a uniform coupling phase modifies the effective locking range according to Eq. (2.2-39) just as it did for two oscillators, and the ensemble frequency is modified according to Eq. (2.2-38). Interestingly, if the inter-oscillator phase difference is 90 deg, the ensemble frequency becomes independent of the coupling phase as pointed out by Humphrey and Fusco [25].

The speed of the array response to the application of a step tuning is determined by the smallest nonzero eigenvalue. From Eq. (2.2-28) this is,

$$\lambda_{U0} = -4\sin^2\left(\frac{\pi/2}{(2N+1)}\right) \approx -\left(\frac{\pi}{(2N+1)}\right)^2 \quad (2.2\text{-}40)$$

This provides the important result that the linear array response time constant is roughly proportional to the square of the number of elements, the approximation becoming more accurate as the number of elements is increased.

While the time constant is unaffected, the effective steering speed of such arrays, as defined by the radiated beam peak neglecting aberration, may be increased by "over-steering." That is, one may apply more detuning than necessary to achieve the desired steady-state phase gradient but reduce it to the required value during the beam-steering transient. Generalizing this concept, one may apply arbitrarily time-varying detuning as suggested by Heath et al. [29]. In particular they considered sinusoidal detuning and showed that the maximum stable inter-oscillator phase shift is thereby increased from 90 to 138 deg.

2.3 Steady-State Solution

In this section we will investigate the steady-state solution for the phase distribution in a bit more detail. From Eq. (2.2-34), the steady-state solution is,

$$[\varphi] = -\sum_{n=1}^{N} \frac{[\Delta\Omega_{tune}] \bullet [v_T]_n}{\lambda_{Tn}[v_T]_n \bullet [v_T]_n}[v_T]_n - \sum_{n=0}^{N} \frac{[\Delta\Omega_{tune}] \bullet [v_U]_n}{\lambda_{Un}[v_U]_n \bullet [v_U]_n}[v_U]_n \tag{2.3-1}$$

in which we have suppressed the linear term in time that merely represents a shift in the ensemble frequency due to the detuning. The denominators of the terms of the series may be written explicitly as,

$$[v_T]_n \bullet [v_T]_n = \sum_{i=-N}^{N} T_i(x_n)^2 = \sum_{i=-N}^{N} \cos^2\left(\frac{2ni\pi}{(2N+1)}\right) = N + \frac{1}{2} \tag{2.3-2}$$

and,

$$[v_U]_n \bullet [v_U]_n = \sum_{i=-N}^{N} U_{i-1}(x_n)^2 = \frac{1}{\sin^2\left(\frac{(2n+1)\pi}{(2N+1)}\right)} \sum_{i=-N}^{N} \sin^2\left(\frac{i(2n+1)\pi}{(2N+1)}\right) = \frac{N+\frac{1}{2}}{\sin^2\left(\frac{(2n+1)\pi}{(2N+1)}\right)} \tag{2.3-3}$$

Suppose that one of the oscillators, say the jth one, is step detuned at time zero from the ensemble frequency by one locking range. The solution given by Eq. (2.3-1) then becomes,

$$[\varphi] = \sum_{n=1}^{N} \frac{2T_j(x_{Tn})}{(-\lambda_{Tn})(2N+1)}[T_i(x_n)] + \sum_{n=0}^{N} \frac{2U_j(x_{Un})}{(-\lambda_{Un})(2N+1)}[U_{i-1}(x_n)]\sin\left(\cos^{-1}(x_{Un})\right) \tag{2.3-4}$$

Thus, the elements of the vector of oscillator phases may be written,

$$\varphi_i = \frac{2}{2N+1}\sum_{n=1}^{N}\frac{\cos\left(\dfrac{j2n\pi}{(2N+1)}\right)\cos\left(\dfrac{i2n\pi}{(2N+1)}\right)}{4\sin^2\left(\dfrac{n\pi}{(2N+1)}\right)} + \frac{2}{2N+1}\sum_{n=0}^{N}\frac{\sin\left(\dfrac{j(2n+1)\pi}{(2N+1)}\right)\sin\left(\dfrac{i(2n+1)\pi}{(2N+1)}\right)}{4\sin^2\left(\dfrac{(2n+1)\pi/2}{(2N+1)}\right)} \tag{2.3-5}$$

The series given by Eq. (2.3-5) has a finite number of terms so it can be summed numerically. As an example, we evaluate this series for N = 10, a 21-element array, with oscillator number 5 detuned one locking range, and plot the phase of each oscillator in Fig. 2-3 as the dots.

Noting that the lowest order terms in n contribute most of the sum, we approximate the eigenvalues in the denominators of Eq. (2.3-5) as follows.

$$4\sin^2\left(\frac{n\pi}{(2N+1)}\right) \approx \left(\frac{2n\pi}{(2N+1)}\right)^2 \tag{2.3-6}$$

$$4\sin^2\left(\frac{(2n+1)\pi/2}{(2N+1)}\right) \approx \left(\frac{(2n+1)\pi}{(2N+1)}\right)^2 \tag{2.3-7}$$

Substituting these approximations in Eq. (2.3-5) gives,

$$\varphi_i \approx \frac{2}{2N+1}\sum_{n=1}^{N}\frac{\cos\left(\dfrac{j2n\pi}{(2N+1)}\right)\cos\left(\dfrac{i2n\pi}{(2N+1)}\right)}{\left(\dfrac{2n\pi}{(2N+1)}\right)^2} + \frac{2}{2N+1}\sum_{n=0}^{N}\frac{\sin\left(\dfrac{j(2n+1)\pi}{(2N+1)}\right)\sin\left(\dfrac{i(2n+1)\pi}{(2N+1)}\right)}{\left(\dfrac{(2n+1)\pi}{(2N+1)}\right)^2} \tag{2.3-8}$$

If the upper limit of these summations is extended to infinity (adding presumably negligible terms), the sum may be written as the simple quadratic function,

$$\varphi_i = \frac{1}{2(2N+1))}\left[i^2 + j^2 - (2N+1)|j-i| + \frac{1}{6}(2N+1)^2\right] \tag{2.3-9}$$

Thus, we see that the steady-state phase distribution when one oscillator is detuned is approximately parabolic with a slope discontinuity at the detuned oscillator. To compare with the earlier example, we evaluate this function for $N = 10$, a 21-element array, with oscillator number 5 detuned one locking range and plot the phase of each oscillator in Fig. 2-3 as x's. Note that the approximation is quite accurate. In fact, in the present example, the maximum error is only about 4 milliradians (mr) of phase.

Finally, we note that, since the eigenvalues repeat, if the sums in Eq. (2.3-5) are continued to an infinite number of terms instead of stopping at N, the result would be a set of delta functions, one at each oscillator, with amplitude (area) equal to the phase of that oscillator.

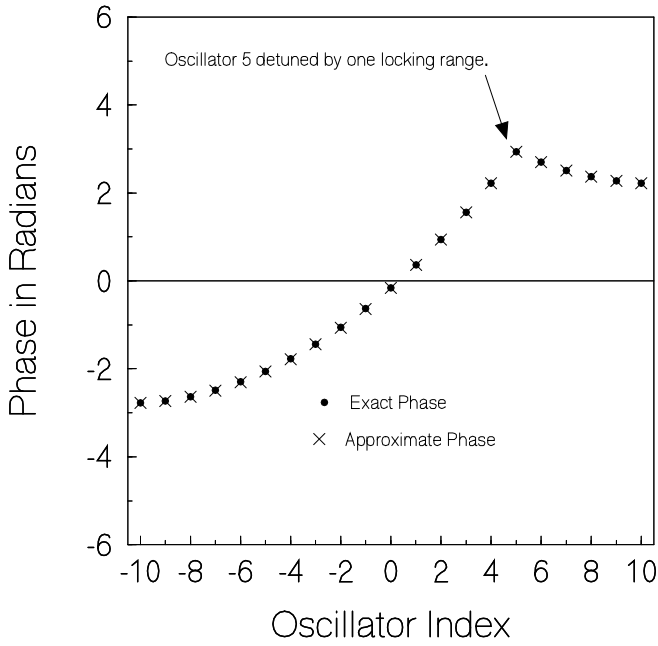

Fig. 2-3. A possible phase distribution for a 21-element array.

2.4 Stability of the Phase Solution in the Full Nonlinear Formulation

In the previous sections of this chapter, we found that linearization provided a path to analytic solution for the phase distribution across the array. It was also pointed out in passing that the full nonlinear formulation provided the oscillator tuning necessary to achieve a desired steady-state phase distribution. In this section we discuss the properties of the steady-state phase solution of the full nonlinear formulation largely as described by Heath, et al. [29]. Recalling that linearization permitted solution of the problem, we expect that the effect of a small perturbation of an assumed solution of the nonlinear equations can be investigated in a similar manner. This is the approach taken by Heath, et al. [29] in determining the stability of the solution in the fully nonlinear case. To place this in the framework of our previous analysis we begin with Eqs. (2.1-1)–(2.1-3) and introduce (2.1-7) to obtain,

$$\frac{d\varphi_i}{dt} = \omega_{0i} - \omega_{ref} + \Delta\omega_{lock}\sin\left(\varphi_{i+1} - \varphi_i - \Phi_{i,i+1}\right) + \Delta\omega_{lock}\sin\left(\varphi_{i-1} - \varphi_i - \Phi_{i,i-1}\right) \tag{2.4-1}$$

$$\frac{d\varphi_{-N}}{dt} = \omega_{0N} - \omega_{ref} + \Delta\omega_{lock}\sin\left(\varphi_{-N+1} - \varphi_{-N} - \Phi_{-N,-N+1}\right) \tag{2.4-2}$$

$$\frac{d\varphi_N}{dt} = \omega_{0N} - \omega_{ref} + \Delta\omega_{lock}\sin\left(\varphi_{N-1} - \varphi_N - \Phi_{N,N-1}\right) \tag{2.4-3}$$

Following Heath, et al. [29], we assume a solution of (2.4-1)–(2.4-3) with a uniform inter-oscillator phase difference (linear phase distribution) and uniform reciprocal coupling, as was the case in the earlier example given by Eqs. (2.1-10)–(2.1-12), and let the phase of each oscillator be changed by a small time dependent perturbation, η_i ; that is,

$$\theta_i = \varphi_i + \omega_{ref}t + \eta_i \tag{2.4-4}$$

Equations (2.4-1)–(2.4-3) then become,

$$\frac{d\eta_i}{dt} = \Delta\omega_{lock}\left[\cos\left(\delta\varphi - \Phi\right)\eta_{i+1} - 2\cos\left(\Phi\right)\cos\left(\delta\varphi\right)\eta_i + \cos\left(\delta\varphi + \Phi\right)\eta_{i-1}\right] \tag{2.4-5}$$

$$\frac{d\eta_{-N}}{dt} = \Delta\omega_{lock}\cos\left(\delta\varphi - \Phi\right)\left(\eta_{-N+1} - \eta_{-N}\right) \tag{2.4-6}$$

$$\frac{d\eta_N}{dt} = \Delta\omega_{lock}\cos\left(\delta\varphi + \Phi\right)\left(\eta_{N-1} - \eta_N\right) \tag{2.4-7}$$

and again we note that the system coefficients matrix multiplying the vector of $\boldsymbol{\eta}$'s will be tridiagonal with diagonal elements $-2\cos\left(\Phi\right)\cos\left(\delta\varphi\right)$ except for the upper left and lower right corners which are $-\cos\left(\delta\varphi - \Phi\right)$ and $-\cos\left(\delta\varphi + \Phi\right)$, respectively. The super-diagonal elements are $\cos\left(\delta\varphi - \Phi\right)$ and the sub-diagonal elements are $\cos\left(\delta\varphi + \Phi\right)$.

From the analysis in Section 2.2, we recall that the stability of the system depended upon the eigenvalues of the system matrix, Eqs. (2.2-25) and

(2.2-28), being negative. So it is in the present case. Thus, we must determine the eigenvalues for this new more complicated system matrix. Heath, et al. [29] provide us with a prescription for doing this. The first step is to symmetrize the matrix by defining new eigenvector elements related to the η 's as follows.

First, define a new variable, γ , via,

$$\gamma_i = \eta_i \left(\frac{\cos(\delta\varphi - \Phi)}{\cos(\delta\varphi + \Phi)} \right)^{\frac{i}{2}} \tag{2.4-8}$$

Now, substitution of Eq. (2.4-8) into Eqs. (2.4-5)–(2.4-7) yields,

$$\begin{aligned} \frac{d\gamma_i}{dt} = \Delta\omega_{lock} \Big[& \sqrt{\cos(\delta\varphi - \Phi)\cos(\delta\varphi + \Phi)}\,\gamma_{i+1} \\ & - 2\cos(\Phi)\cos(\delta\varphi)\gamma_i \\ & + \sqrt{\cos(\delta\varphi - \Phi)\cos(\delta\varphi + \Phi)}\,\gamma_{i-1} \Big] \end{aligned} \tag{2.4-9}$$

$$\begin{aligned} \frac{d\gamma_{-N}}{dt} = & \Delta\omega_{lock} \sqrt{\cos(\delta\varphi - \Phi)\cos(\delta\varphi + \Phi)}\,\gamma_{-N+1} \\ & - \Delta\omega_{lock} \cos(\delta\varphi - \Phi)\gamma_{-N} \end{aligned} \tag{2.4-10}$$

$$\begin{aligned} \frac{d\gamma_N}{dt} = & \Delta\omega_{lock} \sqrt{\cos(\delta\varphi - \Phi)\cos(\delta\varphi + \Phi)}\,\gamma_{N-1} \\ & - \Delta\omega_{lock} \cos(\delta\varphi + \Phi)\gamma_N \end{aligned} \tag{2.4-11}$$

The system matrix for Eqs. (2.4-9)–(2.4-11) is symmetric. Rearranging these equations a bit results in,

$$\begin{aligned} \frac{d\gamma_i}{dt} = \Delta\omega_{lock} & \sqrt{\cos(\delta\varphi - \Phi)\cos(\delta\varphi + \Phi)} \Big[\gamma_{i+1} \\ & - \left(\sqrt{\frac{\cos(\delta\varphi - \Phi)}{\cos(\delta\varphi + \Phi)}} + \sqrt{\frac{\cos(\delta\varphi + \Phi)}{\cos(\delta\varphi - \Phi)}} \right) \gamma_i + \gamma_{i-1} \Big] \end{aligned} \tag{2.4-12}$$

$$\frac{d\gamma_{-N}}{dt} = \Delta\omega_{lock}\sqrt{\cos(\delta\varphi - \Phi)\cos(\delta\varphi + \Phi)} \times \left[\gamma_{-N+1} - \sqrt{\frac{\cos(\delta\varphi - \Phi)}{\cos(\delta\varphi + \Phi)}}\gamma_{-N}\right] \tag{2.4-13}$$

$$\frac{d\gamma_{N}}{dt} = \Delta\omega_{lock}\sqrt{\cos(\delta\varphi - \Phi)\cos(\delta\varphi + \Phi)} \times \left[\gamma_{N-1} - \sqrt{\frac{\cos(\delta\varphi + \Phi)}{\cos(\delta\varphi - \Phi)}}\gamma_{N}\right] \tag{2.4-14}$$

As in Section 2.2, these equations may be written in matrix form. The stability is determined by the eigenvalues, λ_n, of the system matrix, which can be found as follows. Let,

$$\alpha = \cos^{-1}\left[\frac{1}{2}\left(\sqrt{\frac{\cos(\delta\varphi - \Phi)}{\cos(\delta\varphi + \Phi)}} + \sqrt{\frac{\cos(\delta\varphi + \Phi)}{\cos(\delta\varphi - \Phi)}}\right)\right] \tag{2.4-15}$$

Now the analogs of Eqs. (2.2-11)–(2.2-13) are,

$$v_{i-1} - (2\cos\alpha + \lambda_n)v_i + v_{i+1} = 0 \tag{2.4-16}$$

$$v_{N-1} - (e^{i\alpha} + \lambda_n)v_N = 0 \tag{2.4-17}$$

$$v_{-N+1} - (e^{-i\alpha} + \lambda_n)v_{-N} = 0 \tag{2.4-18}$$

and the argument of the Chebyshev polynomials is,

$$x_n = \frac{2\cos\alpha + \lambda_n}{2} \tag{2.4-19}$$

Substituting Eqs. (2.2-19) and (2.2-20) into Eqs. (2.4-17) and (2.4-18) and setting the determinant of the coefficients of α_T and α_U equal to zero gives us the following transcendental equation for the eigenvalues.

$$x_n \sin\left[\left(2N+1\right)\cos^{-1}\left(x_n\right)\right] = \sin\left[\left(2N+1\right)\cos^{-1}\left(x_n\right)\right]\cos\alpha \tag{2.4-20}$$

So either,

$$x_n = \cos\alpha \tag{2.4-21}$$

and, from Eq. (2.4-19) the eigenvalues are zero, or,

$$\sin\left[\left(2N+1\right)\cos^{-1}\left(x_n\right)\right] = 0 \tag{2.4-22}$$

and the eigenvalues are,

$$\begin{aligned}\lambda_n &= 2\cos\left(\frac{n\pi}{2N+1}\right) - 2\cos\alpha \\ &= -4\sin^2\left(\frac{n\pi/2}{2N+1}\right) + 4\sin^2\left(\frac{\alpha}{2}\right)\end{aligned} \tag{2.4-23}$$

The time dependence of the nth perturbation mode will be,

$$e^{\lambda_n \Delta\omega_{lock}\sqrt{\cos\left(\delta\varphi-\Phi\right)\cos\left(\delta\varphi+\Phi\right)}\,t} = e^{\sigma_n t} \tag{2.4-24}$$

and

$$\sigma_n = \lambda_n \Delta\omega_{lock}\sqrt{\cos\left(\delta\varphi-\Phi\right)\cos\left(\delta\varphi+\Phi\right)} \tag{2.4-25}$$

Substituting Eq. (2.4-23) into Eq. (2.4-25),

$$\begin{aligned}\sigma_n = -4\Delta\omega_{lock}&\left[\sin^2\left(\frac{n\pi/2}{2N+1}\right) - \sin^2\left(\frac{\alpha}{2}\right)\right] \\ &\times\sqrt{\cos\left(\delta\varphi-\Phi\right)\cos\left(\delta\varphi+\Phi\right)}\end{aligned} \tag{2.4-26}$$

The nth perturbation eigenmode will be stable if σ_n has a non-positive real part. In general, the phase distribution across the array will be stable if all of the σ_n's have non-positive real parts. Note that in the typical case where Φ is an

integral multiple of π , α is zero. Then, if $|\delta\varphi|$ is less than $\pi/2$ all of the eigenvalues are real and non-positive so the array phase distribution is stable against small perturbations.

In this section we have shown that, by linearizing the equations about an arbitrary solution for the phase distribution in a linear array in which only the end oscillator free running frequencies are controlled, we may study analytically the stability of the solution against small perturbations. Heath, et al. [29] have also shown that exact stable constant phase gradient solutions of the nonlinear equations with arbitrary time dependence can be obtained if one is willing to control the free-running frequencies of all of the oscillators in the array rather than just the end ones.

2.5 External Injection Locking

It was mentioned in passing in Section 2.1 that we chose the number of oscillators in the array to be odd so as to provide a convenient center point at which to inject a stabilizing external signal. In this section we discuss the needed modifications to the mathematical formulation to accommodate an external injection signal and account for its impact on array behavior.

Beginning with Eq. (2.1-1) we envision an external signal injected into the pth oscillator and add a term to the equation representing this signal.

$$\begin{aligned}\frac{d\theta_i}{dt} &= \omega_{0i} + \Delta\omega_{lock}\sin\left(\theta_{i+1} - \theta_i - \Phi_{i,i+1}\right) \\ &+ \Delta\omega_{lock}\sin\left(\theta_{i-1} - \theta_i - \Phi_{i,i-1}\right) \\ &+ \delta_{ip}\Delta\omega_{lock,p,inj}\sin\left(\theta_{inj} - \theta_p - \Phi_{p,inj}\right)\end{aligned} \tag{2.5-1}$$

where δ_{ip} is the Kronecker delta function and $\Delta\omega_{lock,p,inj}$ is the locking range between the external oscillator and the injected oscillator in the array. Note that the phase of the injection signal must remain within $\pi/2$ radians of that of the injected array oscillator to maintain lock. For simplicity, let all of the coupling phases be zero and assume that the inter-oscillator phase differences are small to permit linearization. Then, introducing Eq. (2.1-7) we have,

$$\begin{aligned}\frac{d\varphi_i}{dt} &= \omega_{0i} - \omega_{ref} + \Delta\omega_{lock}\left(\varphi_{i+1} - 2\varphi_i + \varphi_{i-1}\right) \\ &- \delta_{ip}\Delta\omega_{lock,p,inj}\left(\varphi_p - \varphi_{inj}\right)\end{aligned} \tag{2.5-2}$$

By replacing Eq. (2.2-4) with Eq. (2.5-2) while Eqs. (2.2-5) and (2.2-6) remain unchanged, Eq. (2.2-9) now becomes,

$$[s[I]-[M]+[d]][\tilde{\varphi}]=[\Delta\tilde{\Omega}_{tune}]+r[\tilde{\varphi}_{inj}] \tag{2.5-3}$$

where $[d]$ is a matrix with one non-zero element, r, at position pp on its diagonal, $[\varphi_{inj}]$ is a vector with one non-zero component, the pth one., and

$$r=\frac{\Delta\omega_{lock,p,inj}}{\Delta\omega_{lock}} \tag{2.5-4}$$

Here again the tilde denotes Laplace transformation with respect to the scaled time, τ . Equation (2.2-11) is thus replaced by,

$$v_{i-1}-(2+r\delta_{ip}+\lambda_n)v_i+v_{i+1}=0 \tag{2.5-5}$$

And Eqs. (2.2-12) and (2.2-13) are unchanged.

We now postulate eigenvectors with two sets of elements, those to the left of and including the injection site $I = p$ labeled "L" and those to the right of and including the injection site $I = p$ labeled "R." That is,

$$W_i^{(L)}(x_n)=\alpha_T^{(L)}T_i(x_n)+\alpha_U^{(L)}U_{i-1}(x_n);\quad i\le p \tag{2.5-6}$$

$$W_i^{(R)}(x_n)=\alpha_T^{(R)}T_i(x_n)+\alpha_U^{(R)}U_{i-1}(x_n);\quad i\ge p \tag{2.5-7}$$

and we require that the pth elements match at the injection site; that is,

$$W_p^{(L)}(x_n)=W_p^{(R)}(x_n) \tag{2.5-8}$$

Now Eq. (2.5-5) with i=p, Eq. (2.2-12), Eq. (2.2-13), and Eq. (2.5-8) are four equations in the four unknowns, $\alpha_T^{(L)}$, $\alpha_U^{(L)}$, $\alpha_T^{(R)}$, and $\alpha_U^{(R)}$. The equations are homogeneous, so the determinant of the coefficients must be zero if we are to obtain a nontrivial solution. As usual, this condition yields a transcendental equation for x_n thus giving the eigenvalues, λ_n. The transcendental equation in this case is,

$$\sin\left(\cos^{-1} x_n\right)\sin\left((2N+1)\cos^{-1} x_n\right) = r\cos\left((N+\frac{1}{2}+p)\cos^{-1} x_n\right)\cos\left((N+\frac{1}{2}-p)\cos^{-1} x_n\right) \tag{2.5-9}$$

Note that if $r = 0$ we recover the eigenvalues for the uninjected array, Eqs. (2.2-24) and (2.2-27).

Proceeding as in the uninjected case, the solution may be expressed in terms of the eigenvectors and eigenvalues in the form,

$$[\tilde{\varphi}] = \sum_{n=0}^{2N} \frac{\left([\Delta\tilde{\Omega}_{tune}] + [\tilde{\varphi}_{inj}]\right) \bullet [v]_n}{(s-\lambda_n)[v]_n \bullet [v]_n} [v]_n \tag{2.5-10}$$

and the inverse Laplace transform follows immediately. For practice, you may wish to explicitly compute the eigenvalues and eigenvectors and evaluate the solution from Eq. (2.5-10).

The beam-steering scheme proposed by Stephan [1] requires two injection points, $i = p_L$ and $i = p_R$, characterized by two locking-range ratios, r_L and r_R. The solution procedure described above can be generalized to accommodate such a situation as follows. We postulate eigenvectors in three parts, one to the left of both injection points denoted "*L*", one between the injection points denoted "*B*", and one to the right of both injection points denoted "*R*." The elements of these vectors are linear combinations of Chebyshev polynomials as before. Thus, there will be six unknown coefficients, $\alpha_T^{(L)}$, $\alpha_U^{(L)}$, $\alpha_T^{(B)}$, $\alpha_U^{(B)}$, $\alpha_T^{(R)}$, and $\alpha_U^{(R)}$. Imposing the end conditions, continuity at each injection point, and the modified three term recurrence at each injection point,

$$v_{p_L-1} - (2 + r_L + \lambda_n)v_{p_L} + v_{p_L+1} = 0 \tag{2.5-11}$$

$$v_{p_R-1} - (2 + r_R + \lambda_n)v_{p_R} + v_{p_R+1} = 0 \tag{2.5-12}$$

provides a homogeneous system of six equations for these unknown coefficients. Setting the determinant of this system equal to zero yields a transcendental equation for the eigenvalues and the solution proceeds as before. This transcendental equation is,

$$
\begin{aligned}
&\sin\left(\cos^{-1} x_n\right)\sin\left((2N+1)\cos^{-1} x_n\right)+ \\
&+r_L \cos\left((N+\frac{1}{2}+p_L)\cos^{-1} x_n\right)\cos\left((N+\frac{1}{2}-p_L)\cos^{-1} x_n\right) \\
&+r_R \cos\left((N+\frac{1}{2}+p_R)\cos^{-1} x_n\right)\cos\left((N+\frac{1}{2}-p_R)\cos^{-1} x_n\right) \\
&+\frac{r_L r_R}{\sin\left(\cos^{-1} x_n\right)}\cos\left((2N+1+2p_L)\cos^{-1} x_n\right) \\
&\times\cos\left((2N+1-2p_R)\cos^{-1} x_n\right)\sin\left((p_R-p_L)\cos^{-1} x_n\right)=0
\end{aligned}
\tag{2.5-13}
$$

Note that if either r_L or r_R is zero, we recover Eq. (2.5-9). Here again you may want to perform the detailed calculations to obtain the explicit solution. Solutions of this type will be discussed in further detail in connection with the continuum model treated in Chapter 3.

In the extreme case where all of the oscillators are injection locked to the same external oscillator, the solution simplifies considerably. Returning to Eq. (2.5-3), we find that the elements of $[d]$ are all equal as are the elements of $[\varphi_{inj}]$. So that Eq. (2.5-3) becomes,

$$[s[I]-[\bar{M}][\tilde{\varphi}]=[\bar{\Delta}\tilde{\Omega}_{tune}] \tag{2.5-14}$$

where,

$$[\bar{M}]=[M]-[d] \tag{2.5-15}$$

and

$$[\bar{\Delta}\tilde{\Omega}_{tune}]=[\Delta\tilde{\Omega}_{tune}]+r[\tilde{\varphi}_{inj}] \tag{2.5-16}$$

Eq. (2.5-14) is now identical in form to Eq. (2.2-9), and the solution in the form of Eq. (2.2-34) follows immediately. However, if the injection signals differ sufficiently in phase, the elements of the right side of Eq. (2.5-16) can exceed unity and the oscillators therefore lose lock. This phenomenon has been exploited in discriminating between signals arriving at disparate angles in illuminating a phased array. For a given illumination angle the signals at each element differ from those of nearest neighboring elements by a constant phase difference and, if used to inject the corresponding oscillators of a coupled oscillator array, represent the second term on the right side of Eq. (2.5-16). Thus, as the incidence angle increases, the phase differences increase and

eventually the array loses lock. This permits identification of signals arriving outside a given range of incidence angles. [18]

Before proceeding to planar arrays, we remark at this point that one may also produce beam-steering via a variant of the Stephan approach in which the external injection signals are provided by the end oscillators of the array and their phase is controlled by adjusting the coupling phase between the end and next to end oscillators [30].

Finally, we add that, as shown by Heath, control of the coupling phase also affords the possibility of creating a so-called "difference pattern" in which a null is formed instead of a beam. [31] This is done by switching the phase of one interior coupling by π radians. Of course, such a null can also be steered via either detuning or injection of the end oscillators.

2.6 Generalization to Planar Arrays

Nearly all of the formalism presented in connection with linear arrays of oscillators can be generalized to planar arrays. The simplest of planar arrays consists of a linear array of linear arrays placed side by side as shown in Fig. 2-4. Assuming nearest-neighbor coupling, this implies that each oscillator is coupled to four others and can be described mathematically by analogy with Eq. (2.1-1). That is,

$$\begin{aligned}\frac{d\theta_{ij}}{dt} = \omega_{0ij} &+ \Delta\omega_{lock}\sin\left(\theta_{i+1,j} - \theta_{ij} - \Phi\right) \\ &+ \Delta\omega_{lock}\sin\left(\theta_{i-1,j} - \theta_{ij} - \Phi\right) \\ &+ \Delta\omega_{lock}\sin\left(\theta_{i,j-1} - \theta_{ij} - \Phi\right) \\ &+ \Delta\omega_{lock}\sin\left(\theta_{i,j+1} - \theta_{ij} - \Phi\right)\end{aligned} \tag{2.6-1}$$

where, for simplicity, we have assumed that all of the coupling phases are equal. The oscillators are indexed separately in the two orthogonal directions x and y in the plane of the array by indices i and j, respectively. The four sine terms correspond to coupling to the four nearest neighboring oscillators implying that for a zero-coupling phase, the center oscillator may be detuned by as much as four locking ranges, and the array will still remain locked. Similarly, the corner oscillators may be detuned by two locking ranges. The largest permitted detuning of the other oscillators will lie between two and four locking ranges. The effects of a uniform coupling phase can be determined in

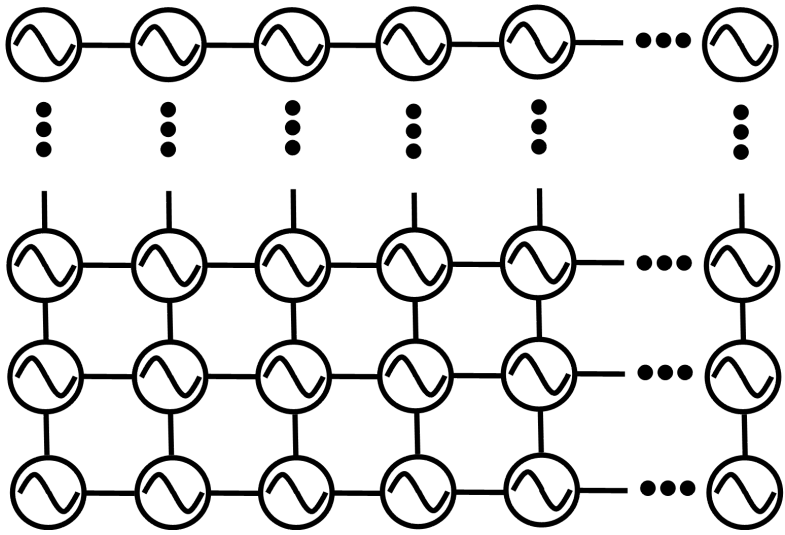

Fig. 2-4. Planar array with nearest neighbor coupling.

the same manner as in the one-dimensional case. That is, an effective locking range and ensemble frequency shift can be determined as a function of coupling phase. Letting the coupling phase be zero and linearizing as we have done in the case of linear arrays, we obtain,

$$\begin{aligned}\frac{d\theta_{ij}}{dt} &= \omega_{0ij} + \Delta\omega_{lock}\left(\theta_{i+1,j} - \theta_{ij}\right) + \Delta\omega_{lock}\left(\theta_{i-1,j} - \theta_{ij}\right) \\ &\quad + \Delta\omega_{lock}\left(\theta_{i,j-1} - \theta_{ij}\right) + \Delta\omega_{lock}\left(\theta_{i,j+1} - \theta_{ij}\right) \\ &= \omega_{0ij} + \Delta\omega_{lock}\left(\theta_{i+1,j} - 2\theta_{ij} + \theta_{i-1,j}\right) \\ &\quad + \Delta\omega_{lock}\left(\theta_{i,j-1} - 2\theta_{ij} + \theta_{i,j+1}\right)\end{aligned} \tag{2.6-2}$$

or, using Eq. (2.1-7) and $\tau = \Delta\omega_{lock} t$, we find that,

$$\begin{aligned}\frac{d\varphi_{ij}}{d\tau} &= \left(\frac{\omega_{0ij} - \omega_{ref}}{\Delta\omega_{lock}}\right) + \left(\varphi_{i+1,j} - 2\varphi_{ij} + \varphi_{i-1,j}\right) \\ &\quad + \left(\varphi_{i,j-1} - 2\varphi_{ij} + \varphi_{i,j+1}\right)\end{aligned} \tag{2.6-3}$$

Laplace transformation leads to,

$$s\tilde{\varphi}_{ij} = \Delta\tilde{\Omega}_{tune} + \left(\tilde{\varphi}_{i+1,j} - 2\tilde{\varphi}_{ij} + \tilde{\varphi}_{i-1,j}\right) + \left(\tilde{\varphi}_{i,j-1} - 2\tilde{\varphi}_{ij} + \tilde{\varphi}_{i,j+1}\right) \tag{2.6-4}$$

where, $[\Delta\Omega_{tune}] = \left[\dfrac{\omega_{0ij} - \omega_{ref}}{\Delta\omega_{lock}}\right]$, elements of a rectangular matrix. This equation may now be written in matrix form by defining a matrix $[\tilde{\varphi}]$ with elements $\tilde{\varphi}_{ij}$. We now define eigenmatrices, $[v]$, with elements, v_{ij}, and eigenvalues, λ_{mn}, satisfying,

$$\left(v_{i+1,j} - 2v_{ij} + v_{i-1,j}\right) + \left(v_{i,j-1} - 2v_{ij} + v_{i,j+1}\right) = \lambda_{mn} v_{ij} \tag{2.6-5}$$

The key concept enabling analytical treatment of planar arrays is separability of the behavior in the two orthogonal directions. That is, if we define the two dimensional phase distribution to be the product of two one dimensional distributions,

$$v_{ij} = v_i v_j \tag{2.6-6}$$

Then Eq. (2.6-5) becomes,

$$v_j\left(v_{i+1} - 2v_i + v_{i-1}\right) + v_i\left(v_{j-1} - 2v_i + v_{j+1}\right) = \lambda_{mn} v_i v_j \tag{2.6-7}$$

Dividing by the product, $v_i v_j$, results in,

$$\frac{\left(v_{i+1} - 2v_i + v_{i-1}\right)}{v_i} + \frac{\left(v_{j-1} - 2v_j + v_{j+1}\right)}{v_j} = \lambda_{mn} \tag{2.6-8}$$

The first term on the left is dependent only on *i* and is independent of *j*. Similarly the second term on the left is dependent only on *j* and is independent of *i*. The right side of the equation is independent of both *i* and *j*. Thus, we have a sum of a function of *i* and a function of *j* equal to a constant which implies that each of these functions must itself be a constant. That is,

$$\frac{\left(v_{i+1} - 2v_i + v_{i-1}\right)}{v_i} = \lambda_m \tag{2.6-9}$$

$$\frac{\left(v_{j-1} - 2v_j + v_{j+1}\right)}{v_j} = \lambda_n \tag{2.6-10}$$

and

$$\lambda_m + \lambda_n = \lambda_{mn} \tag{2.6-11}$$

Using the definition of [*M*] from Eq. (2.2-7), we may write Eqs. (2.6-9) and (2.6-10) in the forms,

$$[M]][v]_m = \lambda_m [v]_m \tag{2.6-12}$$

and

$$[M]][v]_n = \lambda_n [v]_n \tag{2.6-13}$$

which are identical to Eq. (2.2-10). Thus, the eigenmatrices have been separated into the outer product of eigenvectors, one for the *i* dependence and one for the *j* dependence, and each of these eigenvectors is identical with those of the linear array of section 2.2. That is,

$$[v]_{mn} = [v]_m \otimes [v]_n \tag{2.6-14}$$

The eigenvectors and eigenvalues of Eqs. (2.6-12) and (2.6-13) were found in section 2.2, and we will use them here to express the solution of Eq. (2.6-4) in the form,

$$[\tilde{\varphi}] = \sum_m \sum_n C_{mn} [v]_{mn} \tag{2.6-15}$$

Substitution of this form into Eq. (2.6-4) gives,

$$\begin{aligned} s \sum_m \sum_n C_{mn} [v]_{mn} = \Delta\tilde{\Omega}_{tune} + \lambda_m \sum_m \sum_n C_{mn} [v]_{mn} \\ + \lambda_n \sum_m \sum_n C_{mn} [v]_{mn} \end{aligned} \tag{2.6-16}$$

We now make use of the orthogonality of the eigenvectors. Premultiplying by $[v]_p$ and post multiplying by $[v]_q$, we have,

$$sC_{pq}\left([v]_p \bullet [v]_p\right)\left([v]_q \bullet [v]_q\right) = [v]_p \bullet \Delta\tilde{\Omega}_{tune} \bullet [v]_q + \left(\lambda_p + \lambda_q\right)\left([v]_p \bullet [v]_p\right)\left([v]_q \bullet [v]_q\right) \tag{2.6-17}$$

so that,

$$C_{pq} = \frac{[v]_p \bullet \Delta\tilde{\Omega}_{tune} \bullet [v]_q}{\left(s - \lambda_p - \lambda_q\right)\left([v]_p \bullet [v]_p\right)\left([v]_q \bullet [v]_q\right)} \tag{2.6-18}$$

And Eq. (2.6-15) becomes,

$$[\tilde{\varphi}] = \sum_m \sum_n \frac{[v]_m \bullet \Delta\tilde{\Omega}_{tune} \bullet [v]_n}{\left(s - \lambda_m - \lambda_n\right)\left([v]_m \bullet [v]_m\right)\left([v]_n \bullet [v]_n\right)} [v]_{mn} \tag{2.6-19}$$

the planar analog of Eq. (2.2-33). The stability analysis of Section 2.4 also carries over to the planar case as discussed by Heath, et al. [29]. One may similarly derive a planar analog of (2.5-10) should there be external injection [2]. The dynamic behavior of the phase distribution for these cases will be discussed in greater detail in connection with the continuum model presented in Chapter 3. However, we remark here that Karl Stephan and his student, William Morgan, reported application of his external injection beam-steering technique to a four-by-four planar array of mutually injection-locked oscillators [2]. They also developed a theory for such arrays in which the coupling is accomplished via a general multiport coupling network described by an admittance matrix as will be further described in Section 2.7 [2] [3]. They considered theoretically the use of such an oscillator array to excite an array of tapered slot radiators reasoning that the higher gain of these elements would mitigate grating lobes if the array size were increased by using element spacing greater than a half wavelength.

2.7 Coupling Networks

So far we have focused primarily on the behavior of the oscillators in the array but very little on the manner in which they are coupled. We merely asserted that the coupling was present with a certain assumed strength and coupling phase. In addition, two other parameters are important in the design of coupled-oscillator arrays, the network quality factor or Q, which is related to the bandwidth, and the load presented to the oscillators by the network. Although not essential, two simplifying assumptions are quite commonly made. The coupling strength is assumed to be weak in a sense to be detailed shortly, and

the coupling network Q is assumed to be small relative to the oscillator Q so that the network can be assumed to be frequency independent over the operating bandwidth of the oscillators. Finally, it is essential that the load resistance presented to the oscillators be smaller than the maximum negative resistance the oscillator can produce so that oscillation can be sustained. In order to systematically design appropriate coupling networks, it is necessary to derive relationships between these three parameters and the values of the components used in constructing the network. In this section, such relationships will be derived.

Before proceeding, we remark that the consequences of violation of the above simplifying assumptions have in fact been studied. The case of strong coupling was treated in this context by Nogi, et al. [17]. They showed that strongly coupled arrays exhibit many modes in which the oscillator amplitudes as well as the phases vary across the array and that only one mode has constant amplitude. They further suggested that all other modes can be suppressed by placing a series resistor at the center point of each coupling line. The principle underlying this approach was pointed out very early by Stephan and Young. [3] The implications of narrow-band coupling networks were studied by Lynch and York [32]. The analysis becomes more complicated than in the broadband case [33], but useful results can still be obtained. Very recently these issues were re-examined by Seetharam and Pearson [19]. They showed that strongly coupled oscillator arrays exhibit wider locking ranges and lower phase noise levels but that the broadband assumption concerning the coupling network is violated, necessitating the use of the more complicated theoretical formalism.

Generally, the oscillators may be viewed as being coupled by a multiport passive network to which an oscillator is to be connected at each port. This situation was analyzed by Pogorzelski [34]. The network is characterized by its complex admittance matrix; and for a linear array, if the desired coupling is to nearest neighbors, then the admittance matrix will be tridiagonal. For analytical simplicity, we assume an infinitely long array. We want the oscillators to operate in identical environments, so we design the network to be periodic with period unity in the oscillator index. Its admittance matrix will therefore have equal diagonal elements, Y_{11}, and equal off-diagonal elements, Y_{12}.

Focusing now on the network alone, in terms of the complex impedance matrix we may write the network equations in the form,

$$[Z]\left[I_{port}\right]=\left[V_{port}\right] \tag{2.7-1}$$

where the vector components are the port currents and port voltages. Because the network is periodic, the elements of the impedance matrix, Z_{mn} will have the form,

$$Z_{mn} = Z_{n-m} = Z_{\ell} \tag{2.7-2}$$

where the port indices, *m* and *n*, extend from minus infinity to plus infinity for this infinite network. In this sense, ℓ denotes the "distance of the element from the main diagonal of the matrix." Furthermore, the network periodicity implies that the components of the eigenvectors, $[w]_{\Delta\varphi}$, of the impedance matrix will have uniform phase progression and uniform amplitude across the network ports. That is, the elements of the eigenvector with inter-port phase difference $\Delta\varphi$ are,

$$w_m = e^{jm\Delta\varphi} \tag{2.7-3}$$

Defining,

$$\left[I_{port}\right] = I_{\Delta\varphi}\left[w\right]_{\Delta\varphi} \tag{2.7-4}$$

and

$$\left[V_{port}\right] = V_{\Delta\varphi}\left[w\right]_{\Delta\varphi} \tag{2.7-5}$$

every equation in the system given by Eq. (2.7-1) becomes,

$$\left(\sum_{n=-\infty}^{\infty} Z_{\ell} e^{j\ell\Delta\varphi}\right) I_{\Delta\varphi} = V_{\Delta\varphi} \tag{2.7-6}$$

Now, the tridiagonal admittance matrix gives us,

$$I_{\Delta\varphi} = V_{\Delta\varphi}\left(Y_{11} + Y_{12}e^{j\Delta\varphi} + Y_{12}e^{-j\Delta\varphi}\right) \tag{2.7-7}$$

Combining Eqs. (2.7-6) and (2.7-7), we have,

$$\sum_{n=-\infty}^{\infty} Z_{\ell} e^{j\ell\Delta\varphi} = \frac{1}{\left(Y_{11} + 2Y_{12}\cos\Delta\varphi\right)} \tag{2.7-8}$$

a Fourier series for which the coefficients, Z_ℓ, can be found by means of the usual integration. That is,

$$Z_\ell = \frac{1}{2\pi}\int_{-\pi}^{\pi} \frac{e^{-j\ell\alpha}\, d\alpha}{\left(Y_{11} + 2Y_{12}\cos\alpha\right)} \tag{2.7-9}$$

The integration can be carried out analytically to yield,

$$Z_\ell = \frac{1}{\sqrt{Y_{11}^2 - 4Y_{12}^2}}\left(\frac{\sqrt{Y_{11}^2 - 4Y_{12}^2} - Y_{11}}{2Y_{12}}\right)^\ell \tag{2.7-10}$$

This approach is quite similar to that used in the analysis of phased-array antennas to obtain the well-known relationship between the mutual coupling coefficients among the elements and the active reflection coefficients of the array [35]. The result is that we have expressed the elements of the impedance matrix and admittance matrix of the coupling network in terms of the two parameters, Y_{11} and Y_{12}.

We now define the complex coupling coefficient of the coupling network in the following way. Let the voltage at the nth port be V_n and the current into the nth port be I_n. We can establish a Norton equivalent circuit at the $(n+1)^{\text{st}}$ port as follows. The open circuit voltage is,

$$V_{oc} = I_n Z_1 \tag{2.7-11}$$

and the short circuit current is,

$$I_{sc} = -V_n Y_{12} \tag{2.7-12}$$

Thus, the Norton admittance is,

$$Y_N = \frac{V_n Y_{12}}{I_n Z_1} = \frac{-Y_{12}}{Y_{11} Z_1} = -\frac{Y_{11}^2 - 4Y_{12}^2 - Y_{11}\sqrt{Y_{11}^2 - 4Y_{12}^2}}{2Y_{11}} \tag{2.7-13}$$

Now, using the Norton equivalent circuit and connecting load admittance G_L to the port, the voltage at port n+1 is,

$$V_{n+1} = I_{sc}\frac{1}{G_L + Y_N} = -V_n \frac{Y_{12}}{G_L + Y_N} \tag{2.7-14}$$

The complex coupling coefficient, κ , is defined to be the ratio of the voltage at port n+1 to the voltage at port n. That is,

$$\kappa = \frac{-Y_{12}}{G_L + Y_N} \tag{2.7-15}$$

In the weak coupling approximation, Y_{12} is small and to first order in Y_{12}, we have,

$$\kappa \approx \frac{-Y_{12}}{G_L} \tag{2.7-16}$$

This coupling factor determines the locking range because the injection signal arriving at an oscillator, i, from a neighboring one, j, is the amplitude of the oscillator signal, A_j, multiplied by κ so the locking range is given by,

$$\Delta\omega_{lock} = \frac{\omega_{0i}}{2Q}\frac{\kappa A_j}{A_i} \approx \frac{-Y_{12}\omega_{0i}}{2QG_L} \tag{2.7-17}$$

For comparison, see Eq. (1.3-16).

Before proceeding, we wish to highlight an interesting point regarding the nature of the coupling. If a current is injected into the nth port of the network with all other ports open circuited, the voltage appearing at port $n+m$ is, from the impedance matrix, just Z_m/Z_0 times the voltage at the injected port. (See Eq. (2.7-10).) That is, open-circuit voltages appear at *all ports throughout the network*, not just at the adjacent ports. In this sense, each oscillator really influences all the others, and the coupling is "all to all" rather than "nearest neighbor" in nature. The fact that the admittance matrix is banded might seem to imply nearest-neighbor coupling, but the banded nature of the matrix merely implies that, when a voltage is applied to the nth port *with all the other ports shorted*, short-circuit current flows only in the adjacent ports. The limited influence results from shorting the ports not from limited coupling. That said, we proceed to define the coupling factor of the network, as the ratio of the open-circuit voltages at adjacent ports when a current is injected into the nth port of the network with all other ports open circuited. From Eq. (2.7-10), that ratio is,

$$\varepsilon = \frac{\sqrt{Y_{11}^2 - 4Y_{12}^2} - Y_{11}}{2Y_{12}} \tag{2.7-18}$$

For weak coupling, this becomes,

$$\varepsilon \approx \frac{-Y_{12}}{Y_{11}} \tag{2.7-19}$$

where we have effectively neglected the coupling to the non-nearest neighbor ports by working only to first order in this ratio. This same result is obtained if we define the coupling factor by applying a voltage to the nth port, shorting all the others and taking the ratio of the $(n+1)^{st}$ port current to the nth port current. This obtains because if G_L is large compared to Y_{12}, the coupling is weak and the ports are all nearly shorted.

The coupling factor appearing in the expression for the locking range given by Eq. (2.7-17) depends on both the oscillator load and the coupling network. Based on the discussion above, we can separate these by writing Eq. (2.7-16) in the form,

$$\kappa \approx \left(\frac{-Y_{12}}{Y_{11}}\right)\left(\frac{Y_{11}}{G_L}\right) = \varepsilon\eta \tag{2.7-20}$$

so that the first factor, ε, characterizes the network coupling and the second factor, η, characterizes the coupling of the oscillators to the network.

The second important parameter in network design is the network quality factor or Q. Fundamentally, Q is defined in terms of energy stored and energy lost per unit time, but equivalently, Q can also be defined in terms of the frequency dependence of the port admittance near resonance; that is,

$$Q = \frac{\omega}{2}\left|\frac{\frac{\partial Y}{\partial \omega}}{Y}\right|_{\omega=\omega_{res}} \tag{2.7-21}$$

a unitless quantity. For our coupling network we thus have the formula,

$$Q_{net} = \frac{\omega}{2}\left|\frac{\frac{\partial}{\partial \omega}\left(Y_{11} + 2Y_{12}\cos\Delta\varphi\right)}{Y_{11} + 2Y_{12}\cos\Delta\varphi}\right|_{\omega=\omega_{res}} \tag{2.7-22}$$

And, for our formulation to apply, this must be much smaller than the Q of the oscillators.

Finally, the third parameter in the design of these arrays is the amount of negative resistance that must be provided by the oscillators. When operating normally, the current entering each port of the network is related to the port voltage by the port admittance; that is,

$$Y_{\Delta\varphi} = \frac{I_{\Delta\varphi}}{V_{\Delta\varphi}} = Y_{11} + 2Y_{12}\cos\Delta\varphi \tag{2.7-23}$$

Since the inter-oscillator phase difference cannot exceed $\pi/2$ and Y_{12} has a negative real part, the maximum susceptance presented to the oscillator by the network is Re(Y_{11}). Thus, we conclude that the oscillator must be designed to provide a minimum of this amount of negative susceptance plus an amount sufficient to compensate for the internal load susceptance, G_L, to maintain oscillation when connected to the network.

Let us now consider a concrete example of a network of the sort commonly used in experimental studies of linear coupled oscillator arrays. Each unit cell consists of a one wavelength long transmission line of characteristic impedance Z_C, two parallel resistors to reduce the network Q by reducing reflections at the transmission line ends, and two series resistors to control the coupling strength. Such a network is shown in Fig. 2-5 wherein the circles indicate terminals where the oscillators are connected at each end of the unit cell. Using the definitions of the elements of the admittance matrix, we may determine that,

$$\begin{aligned} Y_{11} &= \frac{1}{R_S}\left(\frac{R_P + 2R_S}{R_P + R_S}\right) \\ Y_{12} &= -\frac{1}{2R_S}\left(\frac{R_P}{R_P + R_S}\right) \end{aligned} \tag{2.7-24}$$

so that from Eq. (2.7-19) for weak coupling,

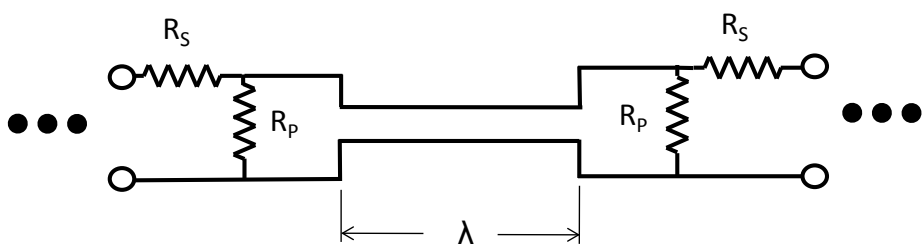

Fig. 2-5. Unit cell of an infinite one-dimensional coupling network.

$$\varepsilon \approx \frac{-Y_{12}}{Y_{11}} = \frac{1}{2}\left(\frac{R_P}{R_P + 2R_S}\right) \tag{2.7-25}$$

and the oscillators must provide negative susceptance, $-G_{osc}$, where,

$$-G_{osc} > \mathrm{Re}\left(Y_{11}\right) = \frac{1}{R_S}\left(\frac{R_P + 2R_S}{R_P + R_S}\right) \tag{2.7-26}$$

In order to determine the network Q using Eq. (2.7-22), it is necessary to explicitly display the frequency dependence of the admittance parameters induced by the transmission lines. That is, from transmission line theory, we have,

$$Y_{11} = 2\frac{\frac{1}{R_p}\left(Z_R \cosh\gamma\ell + Z_C \sinh\gamma\ell\right) + \frac{1}{Z_C}\left(Z_R \sinh\gamma\ell + Z_C \cosh\gamma\ell\right)}{\frac{R_s}{Z_R}\left(Z_R \cosh\gamma\ell + Z_C \sinh\gamma\ell\right) + \frac{R_s}{Z_C}\left(Z_R \sinh\gamma\ell + Z_C \cosh\gamma\ell\right)} \tag{2.7-27}$$

$$Y_{12} = \frac{-\frac{Z_R}{R_s}}{\frac{R_s}{Z_R}\left(Z_R \cosh\gamma\ell + Z_C \sinh\gamma\ell\right) + \frac{R_s}{Z_C}\left(Z_R \sinh\gamma\ell + Z_C \cosh\gamma\ell\right)} \tag{2.7-28}$$

where Z_R is the impedance of the parallel combination of R_p and R_s, and γ is the propagation constant of the transmission line. The frequency dependence arises because γ is linear in ω. Using these expressions in Eq. (2.7-22), we find that,

$$Q_{net} = \frac{\pi}{2}\left|\frac{\left(\frac{Z_R}{Z_C} - \frac{Z_C}{Z_R}\right) + \frac{1}{2}\left(\frac{Z_R}{Z_C} + \frac{Z_C}{Z_R}\right)\cos\Delta\varphi}{\left(\frac{R_s}{Z_R} + \frac{R_s}{R_p}\right) - \cos\Delta\varphi}\right| \tag{2.7-29}$$

(Note that this does not agree with equation (18) of [34] due to an algebraic error in the derivation of that equation.) Typical oscillators used with this network have Q's on the order of 100. To minimize the Q of the network, we chose parameter values to minimize reflections at the ends of the transmission

lines. That is we chose $Z_R \approx Z_C$ so that for small inter-oscillator phase differences we have,

$$Q_{net} \approx \frac{\pi}{4}\frac{R_p}{R_s} \tag{2.7-30}$$

and for resistors of comparable value, the network Q is of order unity, clearly much smaller than the oscillator Q as assumed in the mathematical model.

Another particularly simple coupling network was proposed by Humphrey and Fusco; that of a single capacitor between adjacent ports of the network. [36] The corresponding parameters can be derived from the previous example by setting R_p to infinity and replacing R_s by $1/(2j\omega C)$. Thus,

$$\begin{aligned} Y_{11} &= 2j\omega C \\ Y_{12} &= -j\omega C \end{aligned} \tag{2.7-31}$$

Note that the approximation of Eq. (2.7-19) is not valid for this network so Eq. (2.7-18) must be used and we obtain,

$$\begin{aligned} \varepsilon &\approx \frac{\sqrt{Y_{11}^2 - 4Y_{12}^2} - Y_{11}}{2Y_{12}} = 1 \\ Q_{net} &= \frac{1}{2} \\ -G_{osc} &> 0 \end{aligned} \tag{2.7-32}$$

Note further that the coupling phase is zero.

The approach outlined above for coupling networks designed for linear arrays of oscillators can be generalized to the case of planar arrays in which, for example, each oscillator is coupled to its four nearest neighbors via the network unit cell shown in Fig. 2-5. The admittance matrix is then block tridiagonal, and each diagonal block is tridiagonal while the off-diagonal blocks are diagonal. The matrix is symmetric, and the elements along any diagonal are equal. Thus, the admittance matrix has only three independent elements. The diagonal elements are denoted by Y_d, the off diagonal elements of the diagonal blocks by Y_x, and the diagonal elements of the off-diagonal blocks by Y_y. As shown in [34], the integral in Eq. (2.7-9) then becomes the two dimensional integral,

$$Z_{mn} = \frac{1}{4\pi^2}\int_{-\pi}^{\pi}\int_{-\pi}^{\pi}\frac{e^{-jmu}e^{-jnv}dudv}{\left(Y_d + 2Y_x\cos u + 2Y_y\cos v\right)} \tag{2.7-33}$$

The impedance matrix, though full, also has a block structure. The elements along any diagonal within a block are equal. Similarly, the blocks along any block diagonal are equal. Using a generalization of the notation used previously for the linear case, the first subscript indicates the "distance" from the diagonal within each block and the second subscript indicates the "distance" of the block from the block diagonal.

The integrals given by Eq. (2.7-33) for nearest neighbors, Z_{01} and Z_{10}, as well as the integral for the diagonal elements Z_{00}, can be expressed in terms of elliptic integrals. That is,

$$Z_{00} = \frac{2}{\pi\sqrt{Y_d^2 - 4\left(Y_x - Y_y\right)^2}}K\left[\frac{16Y_xY_y}{Y_d^2 - 4\left(Y_x - Y_y\right)^2}\right] \tag{2.7-34}$$

$$\begin{aligned} Z_{01} = \frac{-2}{\pi\sqrt{Y_d^2 - 4\left(Y_x - Y_y\right)^2}}\Bigg\{&\left(\frac{Y_d - 2Y_x}{2Y_y}\right)K\left[\frac{16Y_xY_y}{Y_d^2 - 4\left(Y_x - Y_y\right)^2}\right] \\ &-\left(\frac{Y_d - 2Y_x - 2Y_y}{2Y_y}\right)\Pi\left[\frac{\pi}{2}, \frac{4Y_y}{Y_d - 2Y_x - 2Y_y}, \sqrt{\frac{16Y_xY_y}{Y_d^2 - 4\left(Y_x - Y_y\right)^2}}\right]\Bigg\} \end{aligned} \tag{2.7-35}$$

$$\begin{aligned} Z_{10} = \frac{-2}{\pi\sqrt{Y_d^2 - 4\left(Y_x - Y_y\right)^2}}\Bigg\{&\left(\frac{Y_d - 2Y_y}{2Y_x}\right)K\left[\frac{16Y_xY_y}{Y_d^2 - 4\left(Y_x - Y_y\right)^2}\right] \\ &-\left(\frac{Y_d - 2Y_x - 2Y_y}{2Y_x}\right)\Pi\left[\frac{\pi}{2}, \frac{4Y_x}{Y_d - 2Y_x - 2Y_y}, \sqrt{\frac{16Y_xY_y}{Y_d^2 - 4\left(Y_x - Y_y\right)^2}}\right]\Bigg\} \end{aligned} \tag{2.7-36}$$

where K is the complete elliptic integral of the first kind and Π is the elliptic integral of the third kind. [37] The analogs of the voltage ratio of Eq. (2.7-18) are,

$$\varepsilon_x = \frac{Z_{10}}{Z_{00}} \tag{2.7-37}$$

and

$$\varepsilon_y = \frac{Z_{01}}{Z_{00}} \tag{2.7-38}$$

These expressions are quite cumbersome. However, as shown in Ref. [34], one may obtain more manageable expressions by evaluating the integrals asymptotically for large subscript via the method of stationary phase when the other subscript is zero. While technically only valid for large index, the form of these expressions exhibits a common ratio between the ports which may be taken to be a measure of the coupling. That is, one obtains,

$$\varepsilon_x \approx -\left(\frac{Y_d + 2Y_y}{2Y_x}\right) + \sqrt{\left(\frac{Y_d + 2Y_y}{2Y_x}\right)^2 - 1} \tag{2.7-39}$$

and

$$\varepsilon_y \approx -\left(\frac{Y_d + 2Y_x}{2Y_y}\right) + \sqrt{\left(\frac{Y_d + 2Y_x}{2Y_y}\right)^2 - 1} \tag{2.7-40}$$

as the analogs of Eq. (2.7-18). For weak coupling, Y_x and Y_y are small compared with Y_d and we obtain,

$$\varepsilon_x \approx -\frac{Y_x}{Y_d + 2Y_y} \tag{2.7-41}$$

and

$$\varepsilon_y \approx -\frac{Y_y}{Y_d + 2Y_x} \tag{2.7-42}$$

Similarly, the analogs of Eq. (2.7-20) are,

$$\kappa_x \approx \left(\frac{-Y_x}{Y_d + 2Y_y}\right)\left(\frac{Y_d + 2Y_y}{G_L}\right) \tag{2.7-43}$$

$$\kappa_y \approx \left(\frac{-Y_y}{Y_d + 2Y_x}\right)\left(\frac{Y_d + 2Y_x}{G_L}\right) \tag{2.7-44}$$

The network Q can again be expressed as the logarithmic derivative of the port admittance with respect to frequency. That is,

$$Q_{net} = \frac{\omega}{2}\left|\frac{\frac{\partial}{\partial\omega}\left(Y_d + 2Y_x\cos\Delta\varphi_x + 2Y_y\cos\Delta\varphi_y\right)}{Y_d + 2Yx\cos\Delta\varphi_x + 2Y_y\cos\Delta\varphi_y}\right|_{\omega=\omega_{res}} \tag{2.7-45}$$

Finally, the oscillators must provide negative resistance such that,

$$-G_{osc} > \mathrm{Re}\left(Y_d\right) \tag{2.7-46}$$

For a network using the coupling configuration shown in Fig. 2-5,

$$\begin{aligned} Y_d &= \frac{2}{R_S}\left(\frac{R_P + 2R_S}{R_P + R_S}\right) \\ Y_x = Y_y &= -\frac{1}{2R_S}\left(\frac{R_P}{R_P + R_S}\right) \end{aligned} \tag{2.7-47}$$

so that,

$$\varepsilon_x = \varepsilon_y \approx \frac{1}{2}\left(\frac{R_p}{R_p + 4R_s}\right) \tag{2.7-48}$$

$$-G_{osc} > \frac{2}{R_S}\left(\frac{R_P + 2R_S}{R_P + R_S}\right) \tag{2.7-49}$$

and,

$$Q_{net} = \frac{\pi}{2}\left|\frac{\left(\frac{Z_R}{Z_C} - \frac{Z_C}{Z_R}\right) + \frac{1}{2}\left(\frac{Z_R}{Z_C} + \frac{Z_C}{Z_R}\right)\left(\frac{\cos\Delta\varphi_x + \cos\Delta\varphi_y}{2}\right)}{\left(\frac{R_s}{Z_R} + \frac{R_s}{R_p}\right) - \left(\frac{\cos\Delta\varphi_x + \cos\Delta\varphi_y}{2}\right)}\right| \tag{2.7-50}$$

For $Z_R \approx Z_C$ and small inter-oscillator phase differences we again have,

$$Q_{net} \approx \frac{\pi}{4}\frac{R_p}{R_s} \tag{2.7-51}$$

which is typically much smaller than the oscillator Q.

In this section we have discussed the analysis of coupling networks for infinite arrays both linear and planar. Although, in practice the arrays are of course finite, the analysis of infinite arrays is more tractable and provides insight into how the circuit parameters affect the array behavior. Thus, relatively simple approximate formulas obtain for the coupling strength, network Q, and needed oscillator negative resistance in terms of circuit element values facilitating the design of such networks.

2.8 Conclusion

In this chapter, the oscillators of the arrays were treated as individual circuits capable of oscillation in themselves. These were coupled to form a mutually injection-locked system of oscillators. In that sense, the modelling was discrete, and the phase distributions studied were distributions of the phases of the individual oscillator outputs, which (of course) have meaning only in terms of the individual oscillator output signals. In the next chapter, however, we will introduce the concept of the continuum model in which the phase distributions are continuous functions. It is emphasized that the values of these continuous functions still only have physical meaning when the functions are evaluated for arguments corresponding to individual oscillators. Arguments between these are for mathematical convenience and the corresponding function values have no physical significance.