An Experiment on Fade Statistics

for Spread and Unspread Modulation Systems in the Mobile Multipath Environment

Jeff Jenkins
Yiping Fan

Why Spread?

- **One reason for looking at spread spectrum in mobile systems is to combat multipath:**

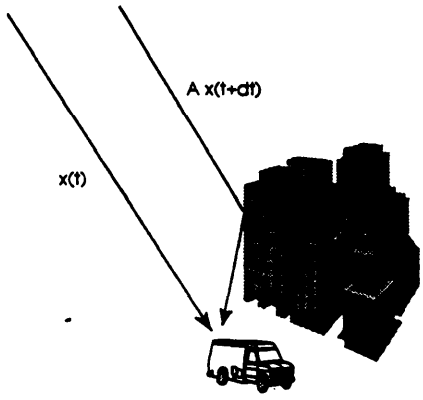

$$r(t)=x(t)+Ax(t+\tau)$$

If we can make the amplitude of the multipath component *at the decision device* small, its effect will be small.

How can Spread Modulation Help?

- **We take advantage of the correlation properties of the spreading functions. The most important of these is the following:**

$$R_{xx}(\tau)=\int PN(t)\times PN(t+\tau)=0, \text{ for } \tau > \text{chip time}$$

- **If the time delay is *not* less than one chip period, the amplitude of the multipath component *after the matched filter* is still reduced linearly with the time delay**

Waveform from Matched Filter

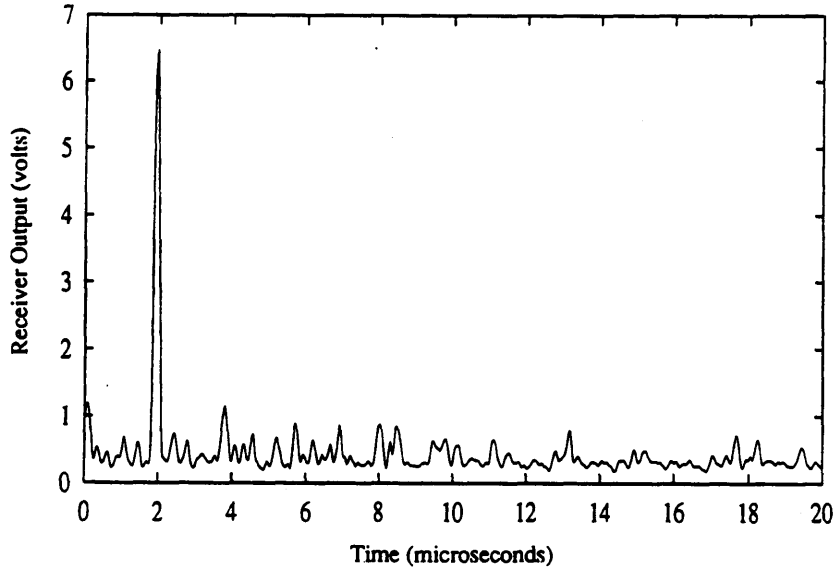

Review of Previous Results

- Fade Statistics were collected in 21 areas of the US during Summer of 1993
- These data provide useful information on what types of fades are likely to be encountered by spread systems in these environments
- Little to nothing has been learned about how spread systems perform compared to unspread modulation systems

Data Collection - Western Route (Summer, 1993)

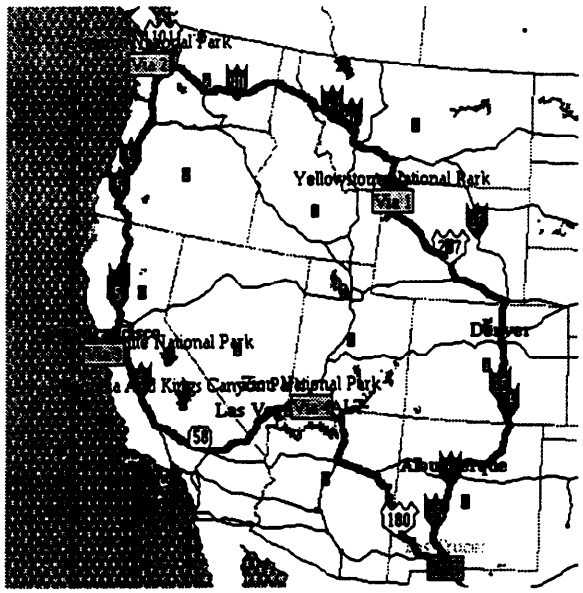

Data Collection - Southeast (Summer, 1993)

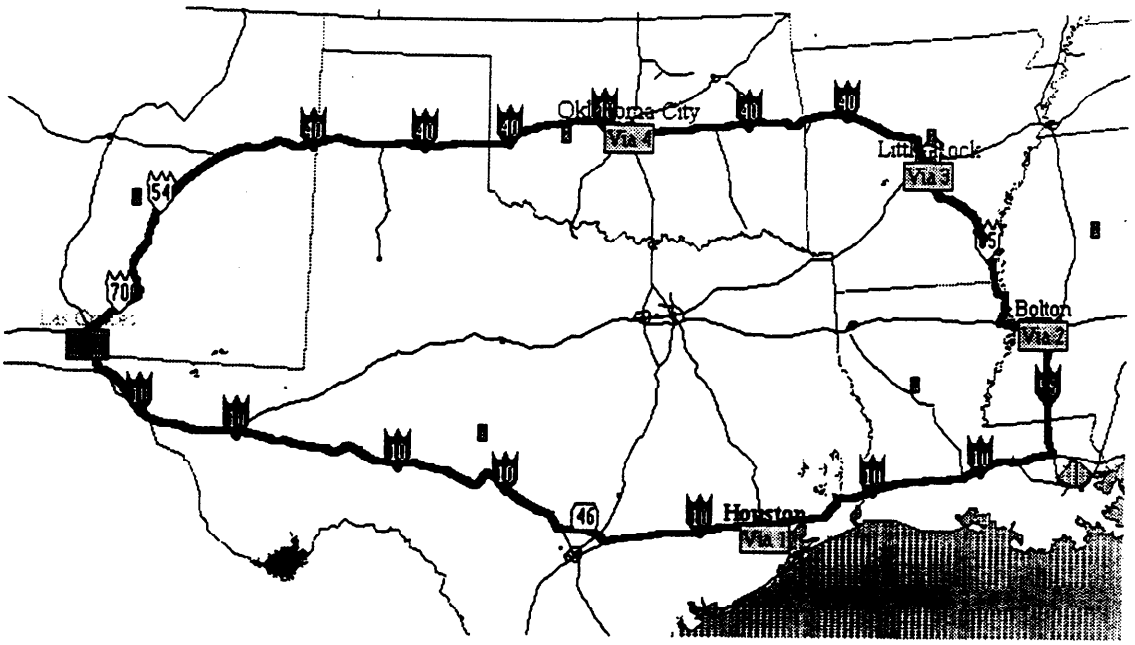

Open Area Fade Statistics

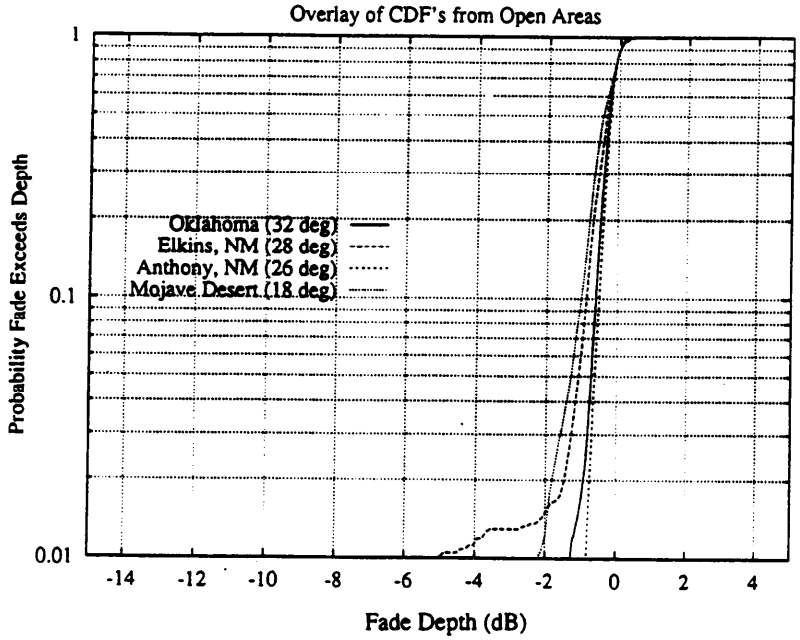

Tree-Line Roads Fade Statistics

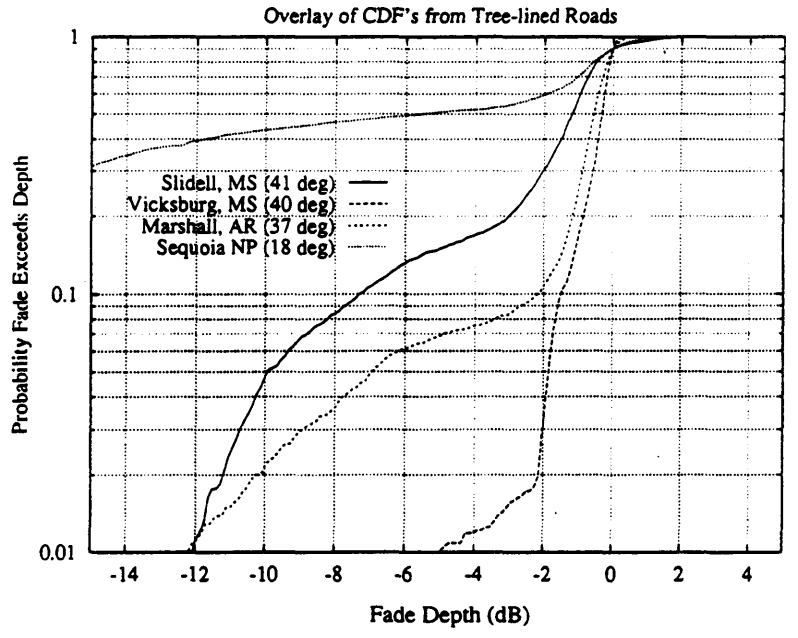

. Urban Areas Fade Statistics

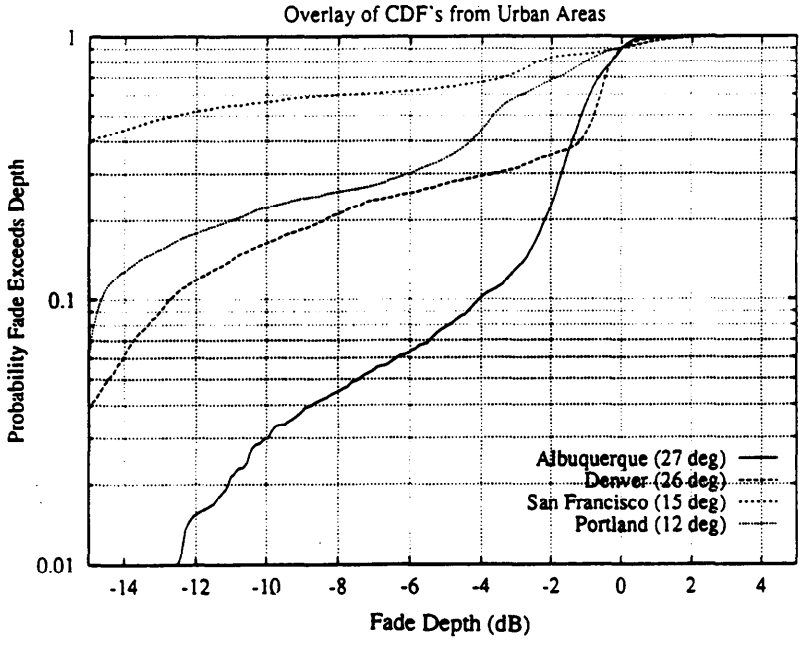

The Big Question

- In practice, can spread modulation systems effectively reduce the severity of multipath fades?
- To answer this question, a side-by-side comparison between spread and unspread systems must be made.
- Parameters of the spread system should be typical of practical systems. Ideally, the chip rate should be variable.

Dual Beacon Data Collection (Summer, 1995)

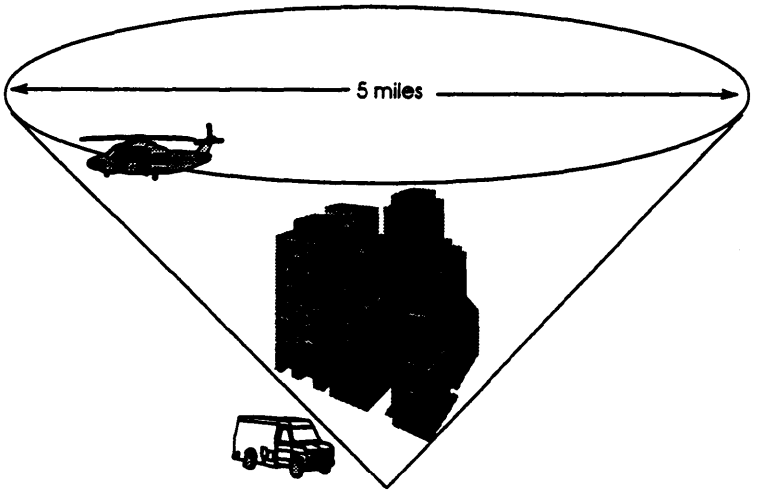

Airborne Platform will be a Cessna 172

Elevation angles from 15 to 45 degrees achievable

Las Cruces, El Paso, Denver, Albuqueque, Tucson, Phoenix, San Antonio, Austin, Dallas/Ft. Worth

Transmitter

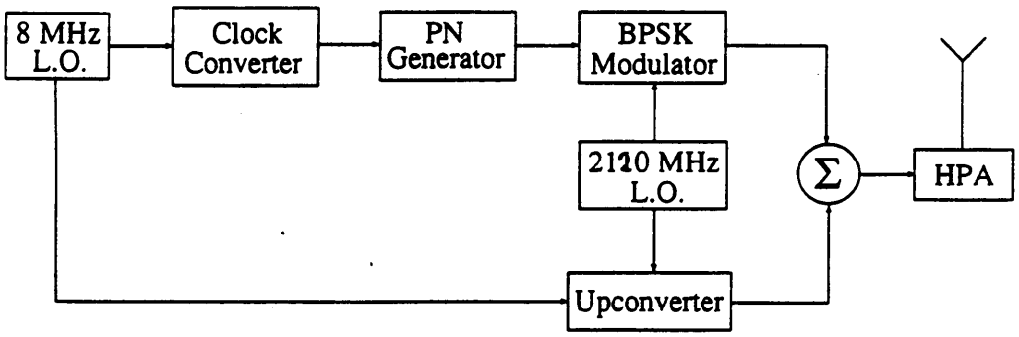

Receiver and Data Collection Equipment

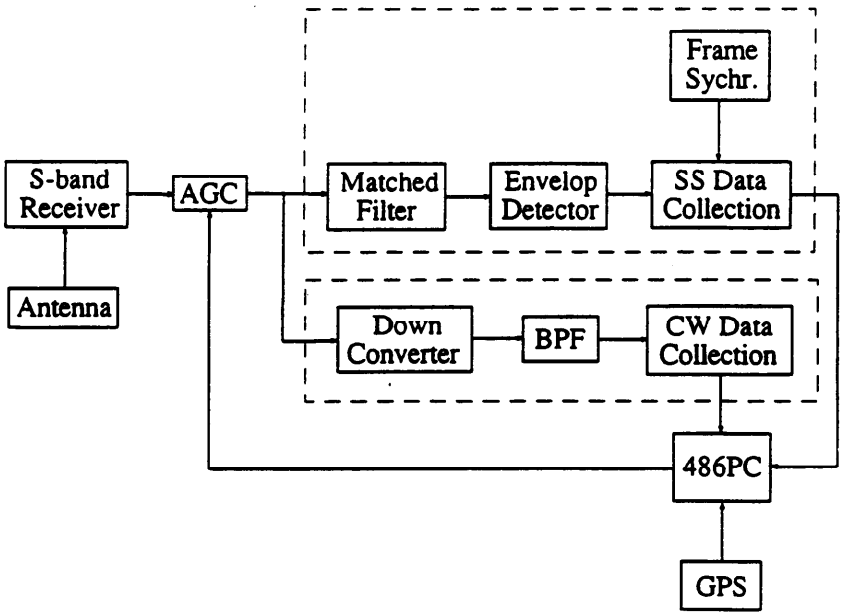

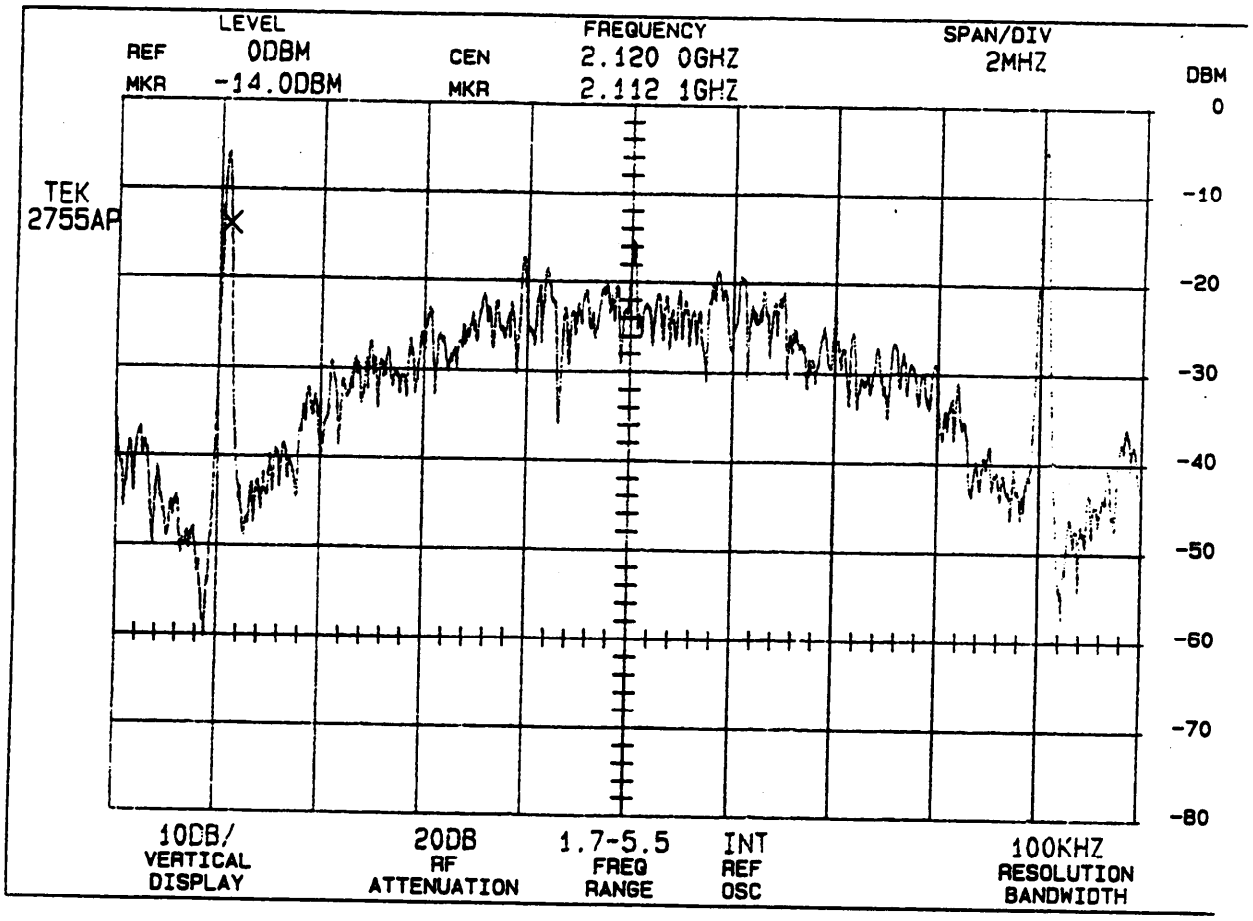

Data Collection Locations & Schedule

- LAS CRUCES & EL PASO (Week of June 19)
- ALBUQUERQUE & DENVER (Week of June 26)
- DALLAS/FT WORTH (Week of July 10)
- AUSTIN& SAN ANTONIO (Week of July 10)
- TUCSON & PHOENIX (Week of July 24)