X-Band Radar System

R. L. Leu
R. F. Systems Development Section

The radar development effort will provide the technology necessary for wider bandwidths at increased ranges. This technology will be applicable for use in uplink and downlink communications with future spacecraft.

I. Introduction

The Radar development effort will provide the technology necessary for wider bandwidths at increased ranges. This technology will be applicable for use in uplink and downlink communications with future spacecraft.

The increased antenna gain (approximately 7 dB) will decrease the observation time for radar targets by a factor of 20. The wider bandwidth will allow faster range codes for improved ranging resolution. The first use of the new radar system will be to study the rings of Saturn as a possible hazard to navigation. This opportunity will start in December 1974.

Although there have been some developmental problems with the 250-kW klystrons, waveguide couplers, and several control assemblies, the scheduled operational date of December 1974 appears realistic. In addition to the technical difficulties discussed in this article, the other major obstacle is obtaining sufficient antenna time for installation and checkout on the 64-m antenna at DSS 14.

II. Radar System

The radar system as discussed in Ref. 1 has undergone some changes. The system specifications are given in Table 1, and a block diagram is presented in Fig. 1. The radar will use a two-feed arrangement as shown only if a high-power polarizer (more specifically, the rotary joints in the polarizer) cannot be developed prior to the radar installation for the rings of Saturn opportunity. The transmit feed (Fig. 1, feed A) will be used as the transmit–receive feed, and the receiver feed (B) will be used as a backup. The two-feed arrangement is undesirable for optimum performance and will be used only as a last resort.

With a two-feed system and the present subreflector pin locations, the radar will have worst-case antenna degradation of approximately 1.3 dB. The 64-m antenna subreflector was not designed for continual focusing operation. It will have to remain in a fixed position and not moved between the transmit and receive feeds. If the subreflector is focused at a point mid-way between the feeds (Fig. 2), the degradation will be approximately 0.5 dB. As the radar is switched

from receive to transmit mode or reversed mode, the antenna pointing will be changed automatically with the computer-operated antenna pointing system to correct for the divergence of the transmit and receive antenna beams. The software required to perform this operation was developed for another project. To improve the performance of a two-feed system, a configuration worth considering would locate the two feeds side by side (Fig. 2b). This would require reconfiguration of the cone layout and provision of new pin locations for the subreflector. The performance degradation would be 0.25 dB.

As indicated in Table 1, the transmit–receive cycle will vary in duration depending on the target being observed. The round-trip time for the rings of Saturn is 2½ h. During the transmit cycle, the radiated RF power must be switched on and off at a 30-s rate. This is disastrous to the klystron amplifiers, as discussed in Ref. 2. References 2 and 3 discuss an approach being implemented in the radar system for switching the radiated RF power on and off. A second method, now being used in the S-band radar, that shifts the RF carrier in frequency (about 1 MHz) at a 31-s rate, will also be available.

III. Transmitter

At the time of this writing, three 250-kW klystrons, six waterloads, three dual directional waveguide couplers, and most of the electronic assemblies have been delivered. One klystron was operated at 225 kW for a short time before failure. One of the waveguide couplers was defective, and the other two malfunctioned at 125 to 150 kW. The malfunction was due to improper design of the terminations in the secondary arms of the couplers. They have been rebuilt and will be retested. Because of the shortage of materials and components in the electronic industry, several of the electronic control and monitor assemblies are late in delivery. This is not expected to cause any delay in the schedule.

IV. Microwave Components

Two hybrid combiners (Ref. 4) have been delivered, and one unit was tested in excess of 225 kW at one port. Testing of the hybrid with two 200-kW inputs will take place in the third quarter of FY'74. Waveguide switches, waveguide test equipment (slotted line, precision sliding load, sliding short, etc.) and waveguide components have been delivered. The switches and some waveguide components will be tested at 250 kW by January 1, 1974.

V. Feed

The basic feed horn design has been completed and is presently being fabricated. The feed horn will be ready for RF power testing by January 1974. The polarizer, including rotary joints, will be ready for testing in February 1974.

The polarizer is the primary suspect area for breakdown from arcing and corona in the feed system. As discussed previously, should the rotary joints not handle the 400-kW power, they will be temporarily replaced with straight sections of waveguide in order to meet the December 1974 operational date. Development of the polarizer would continue, and it would be installed at a later time. The feed horn design will be the same for both feeds (transmit and receive). The receive feed will use the movable polarizer as a backup for the transmit/receive feed.

VI. Exciter

The exciter is required to generate the 8.495-GHz frequency and ±10-MHz phase modulation bandwidth for the radar. The output of the exciter drives the buffer amplifier assembly, which drives the dual klystron amplifiers. The exciter is an extension of the Block IV exciter that has a switched output (530 MHz) for the X-band radar. This output drives a multiplier (×16) to obtain 8.495 GHz. The ×16 multiplier has been designed, procured, and delivered and will be located in the buffer amplifier assembly, as shown in Fig. 1.

VII. Receiver

The receiver will consist of the existing Block IV receiver X-band channel and the X-band traveling-wave maser (TWM) now located in the multi X-band/K-band (MXK) feed cone at DSS 14. The Block IV receiver is presently being tested at DSS 14 and will be available in time for the December 1974 operational date.

VIII. Cooling

Cooling water is required for the klystron, waterloads, waveguide components, and feed. The coolant is provided by modification to the existing transmitter coolant assembly and the waveguide coolant assembly. The modification to the former has been completed, and the waveguide coolant system modification will be ready prior to the radar installation.

References

1. Wiggins, C. P., "X-band Radar Development," in *The Deep Space Network Progress Report*, Technical Report 32-1526, Vol. XII, pp. 19–22, Jet Propulsion Laboratory, Pasadena, Calif., Dec. 15, 1972.
2. Wiggins, C. P., Buchanan, H. R., Leu, R. L., "High Power Microwave Transmitter Switch," in *The Deep Space Network Progress Report*, Technical Report 32-1526, Vol. XVII, pp. 21–27, Jet Propulsion Laboratory, Pasadena, Calif., Oct. 15, 1973.
3. Kolbly, R. B., "High Power Switching and Combining Technique," in *The Deep Space Network Progress Report*, Technical Report 32-1526, Vol. XVI, pp. 105–109, Jet Propulsion Laboratory, Pasadena, Calif., Aug. 15, 1973.
4. Hartop, R. W., "X-Band Hybrid Combiner," in *The Deep Space Network Progress Report*, Technical Report 32-1526, Vol. XVI, pp. 42–46, Jet Propulsion Laboratory, Pasadena, Calif., Aug. 15, 1973.

Table 1. X-band radar system specifications

System	Specifications
Frequency	8495 ±25 MHz
RF output	400 kW (+86 dBm)
RF stability	±0.5 dB
Phase modulation	0–100% carrier suppression, 50 kHz to 10 MHz
Phase jitter system	5 deg RMS
Transmit–receive cycle	3 min to 2.5 h
Modulation	On/off during transmit at 10 s to 30 min
Received mode	Polarization diversity
Subreflector focusing	Transmit/receive

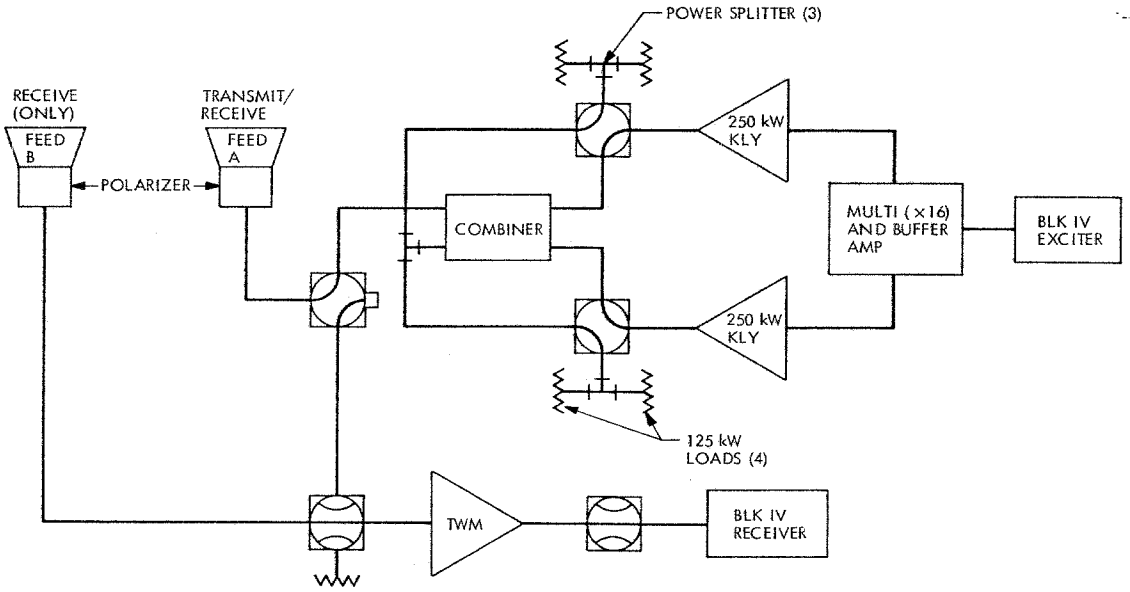

Fig. 1. X-band radar system block diagram

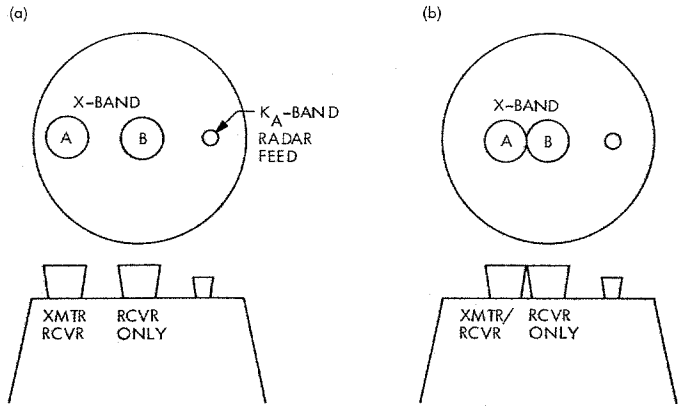

Fig. 2. X-band radar feed location: (a) present, (b) possible dual-feed arrangement