Improved Dichroic Reflector Design for the 64-m Antenna S- and X-Band Feed Systems

P. D. Potter
Communications Elements Research Section

In support of the Mariner Venus/Mercury 1973 (MVM'73) X-band experiment and planned future Mariner missions, the 64-m antenna network is being supplied with S- and X-band reflex feed systems. The initial installation, for MVM'73, was implemented at DSS 14 and provides satisfactory performance for that mission. The X-band performance of the dichroic reflector is, however, not acceptable for planned future missions which have more stringent X-band performance requirements. A new dichroic reflector which grossly reduces the X-band ellipticity and noise temperature degradation has been designed. In this reporting, the theory and experimental performance of this new design is reported.

I. Theory of Operation

The design and performance of the existing DSS 14 reflex feed dichroic reflector (plate) was described in Ref. 1 and is shown in Fig. 1. The plate is 3.576 cm thick, with an array of hexagonally packed 2.273-cm-diameter holes drilled normal to the plate surfaces. The center-to-center hole spacing is 2.388 cm, and the required frequency of operation is 8.415 GHz.

As described in Ref. 1, the E- and H-plane plate resonant frequencies (frequencies of complete transparency) are displaced because of a difference in the E- and H-plane free-space-to-circular waveguide transition discontinuity at the (tilted) plate surfaces. Since the plate is used with circular polarization, this resonant frequency difference causes a differential phase shift between the E- and H-plane, resulting in depolarization of the circularly polarized incident wave. Additionally, because the plate is not reflectionless for all polarizations (at a fixed frequency), a serious (approximately 2-K) noise temperature contribution results from ground radiation. Actual calculations using the Chen Holey Plate Computer Program (Ref. 2) show that the plate E- and H-plane resonant frequencies (30 deg incident wave tilt from normal) are 8.481 and 8.363 GHz, respectively. At the operation fre-

quency of 8.415 GHz, a differential phase shift of 11.3 deg and an ellipticity of 1.75 dB are predicted. Actual measured ellipticity was 1.84 dB. The reflected energy level is −18 dB at 8.415 GHz.

The approach taken to cure the dichroic plate depolarization described above was to make the holes slightly noncircular in cross section, thus introducing a differential E- and H-plane phase shift within the plate to counteract the 11.3-deg phase shift. This change is in the nature of a perturbation on the original design, rather than a redesign; the original plate thickness and hole center spacing are retained. The particular hole cross section selected is "Pyleguide" (Ref. 3). This type of guide, circular with a pair of flats on opposite sides, is used by JPL in the 64-m antenna feed system polarizers. Pyle's (1964) analysis (Ref. 3) is approximate. It is now practical to numerically solve the wave equation in a cylindrical waveguide of arbitrary cross section, yielding highly accurate guide wavelength numbers as a function of geometry. An excellent computer program for this purpose was developed by Knud Pontoppidan, formerly of the Technical University of Denmark (Ref. 4). The Pontoppidan program was modified for use on the JPL Scientific Computing Facility (SCF) Univac 1108 and set up for Pyleguide calculations.

Figures 2a and 2b show the cutoff wavelength λ_c as a function of Pyleguide geometry for the E- and H-planes. The design procedure for the Pyleguide dichroic plate was to adjust the guide geometry (using the Pontoppidan computer program) until the plate electrical thickness at 8.415 GHz for the E- and H-planes corresponded to those in the original circular hole plate at 8.481 and 8.363 GHz, respectively. The resulting geometry is shown in Fig. 3. The hole diameter is 0.013 cm larger than the original circular hole design, and the flat depth is 0.043 cm. Thus, the redesign is only a small perturbation on the original design.

To test the Pyleguide dichroic plate design, a sample section of plate 35 × 53 cm in size was fabricated. The holes were made with a broach, allowing tight tolerances (±0.005 cm) to be held on all hole dimensions. Although performance of this type of dichroic plate is relatively noncritical with regard to tolerences, the strict control was imposed both as an experiment in fabrication technique (there were no problems) and also to provide a good check between predicted and measured performance. Figure 4 is a photograph of the sample Pyleguide dichroic plate. The following section describes the measured performance.

II. Experimental Results

The X-band performance of the Pyleguide dichroic plate sample was measured in the JPL Mesa Antenna Range anechoic chamber facility. Complete pattern data were taken at the design (and operational) frequency of 8.415 GHz; frequency-scanned pattern data were taken in the reflex feed symmetry plane. Optimum performance was observed at the design frequency of 8.415 GHz. No pattern distortion, grating lobe response, or other unexpected behavior was observed.

Figure 5 shows the radiation pattern of the corrugated feedhorn by itself. Figure 6 illustrates the pattern of the feedhorn/tilted dichroic plate combination in the plane containing the horn axis and the plate normal (symmetry plane). For these patterns, the horn was circularly polarized and the illuminator was linearly polarized but rapidly rotating about its axis. Thus, at each point in the radiation patterns, the ellipticity is displayed as a rapidly modulated signal level. As seen in Fig. 6, the ellipticity nulls out at a point 3 deg off axis and is 0.4 dB on axis. From symmetry considerations, the antenna secondary pattern axial ellipticity will be nearly the same as the feed system axial ellipticity.

In Fig. 6, the large lobe in the region of 120 deg is the reflection from the horn side of the dichroic plate. This reflection gives rise to a noise temperature contribution from ground thermal radiation when the antenna is at low elevation angles. The power-average level for the Pyleguide dichroic plate is −24.5 dB, yielding a maximum noise temperature contribution of 0.7 K. The original round-hole plate has a power-average reflection lobe level of −18.6 dB, yielding a noise contribution of 2.7 K. This latter figure has been experimentally observed at DSS 14 (see Fig. 8 of Ref. 1).

III. Conclusion

A different type of hole, "Pyleguide," has been incorporated into the reflex feed dichroic plate design to alleviate polarization degradation and noise temperature contribution due to plate mismatch (reflection). The plate ellipticity degradation has been reduced thereby from 1.8 to 0.4 dB; the maximum noise temperature contribution has been reduced from 2.7 to 0.7 K. The ideal hole shape is a function of its location on the plate. The Pyleguide plate tested had all identical holes. Further performance improvement, if required, appears possible by use of nonidentical holes. The ability to perform this type of design entirely analytically has been demonstrated.

References

1. Potter, P. D., "S- and X-band RF Feed System," in *The Deep Space Network Progress Report*, Technical Report 32-1526, Vol. XV, pp. 54–62, Jet Propulsion Laboratory, Pasadena, Calif., June 15, 1973.
2. Chen, C. C., "Transmission of Microwave Through Perforated Flat Plates of Finite Thickness," *IEEE Transactions on Microwave Theory and Techniques*, Vol. MTT-21, No. 1, pp. 1–6, Jan. 1973.
3. Pyle, J. R., "Cutoff Wavelengths of Waveguides with Unusual Cross Sections," *IEEE Transactions on Microwave Theory and Techniques*, Vol. MTT-12, No. 5, pp. 556–557, Sept. 1964, Correspondence.
4. Pontoppidan, Knud, "Finite-Element Techniques Applied to Waveguides of Arbitrary Cross Sections, Parts I and II," Ph.D. Thesis, The Technical University of Denmark, Lyngby, Denmark, Sept. 1971.

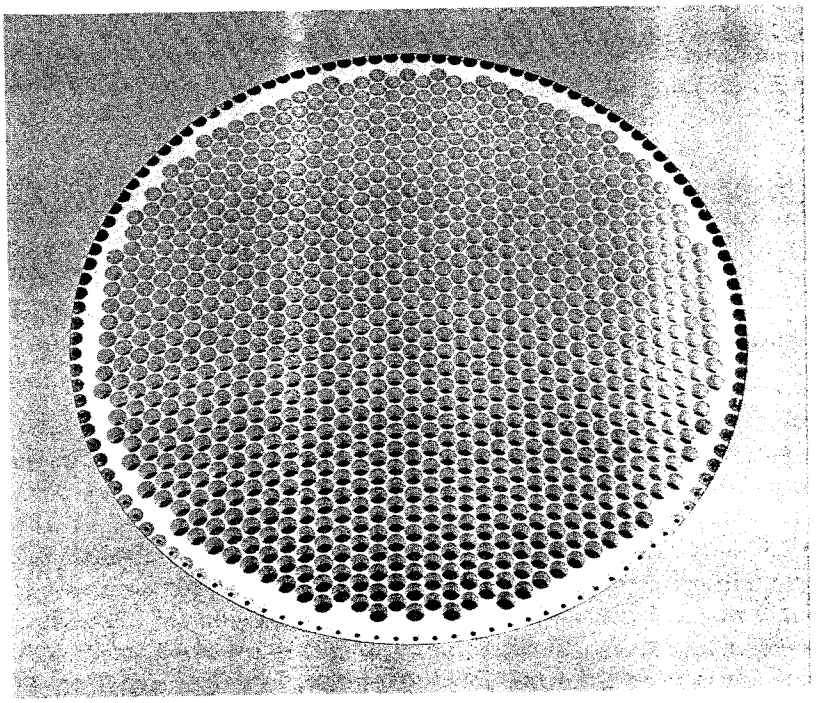

Fig. 1. Original DSS 14 dichroic reflector

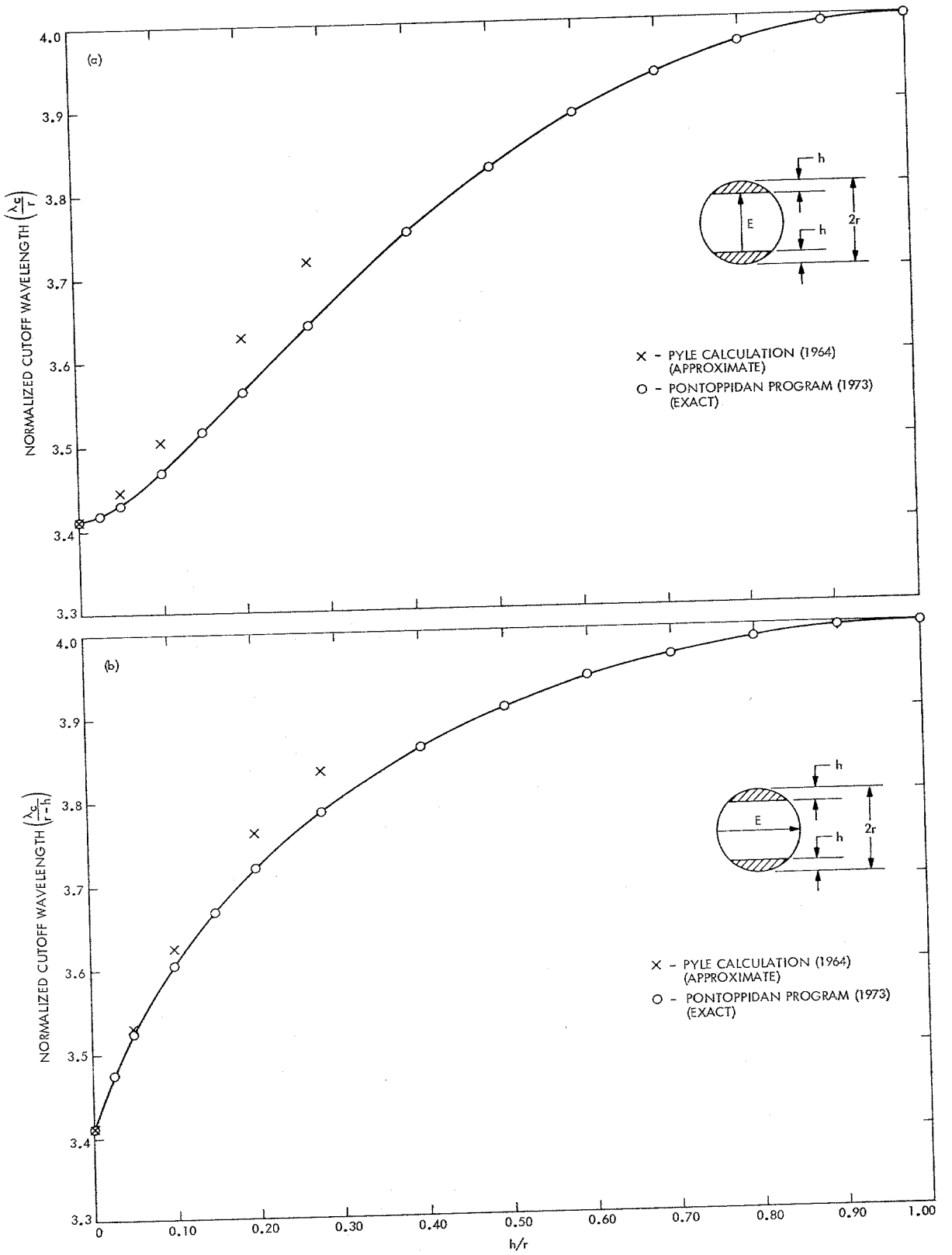

Fig. 2. Normalized cutoff wavelength of Pyleguide (a) Flats in the electric plane (b) Flats in the magnetic plane

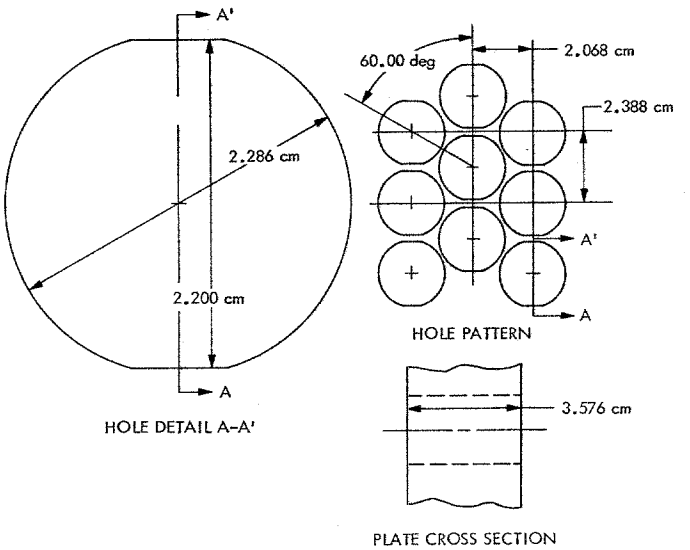

Fig. 3. Pyleguide dichroic plate geometry, 8.415 GHz

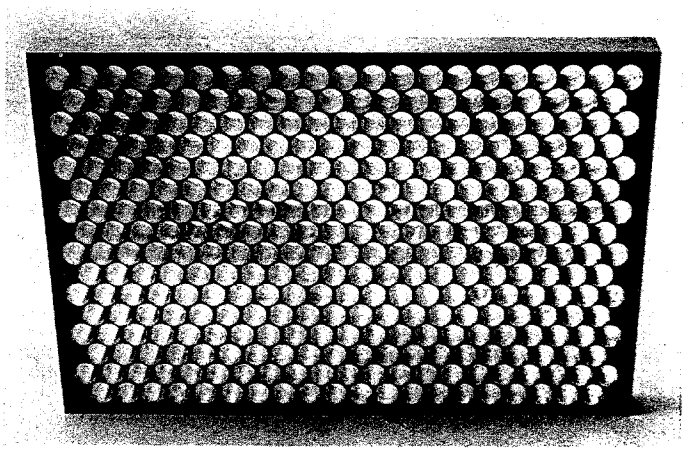

Fig. 4. Pyleguide dichroic plate sample

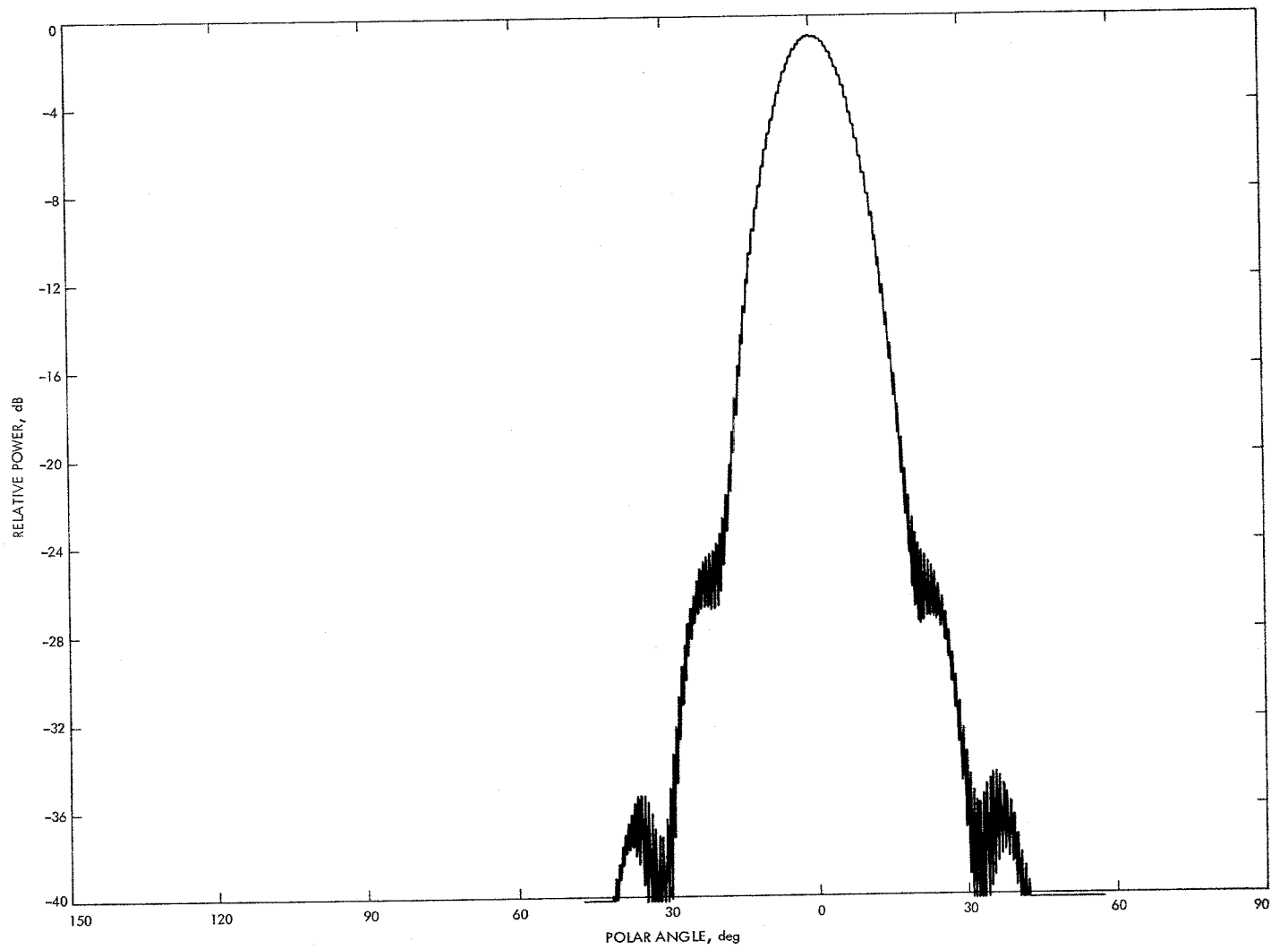

Fig. 5. Corrugated feedhorn radiation pattern, 8.415 GHz

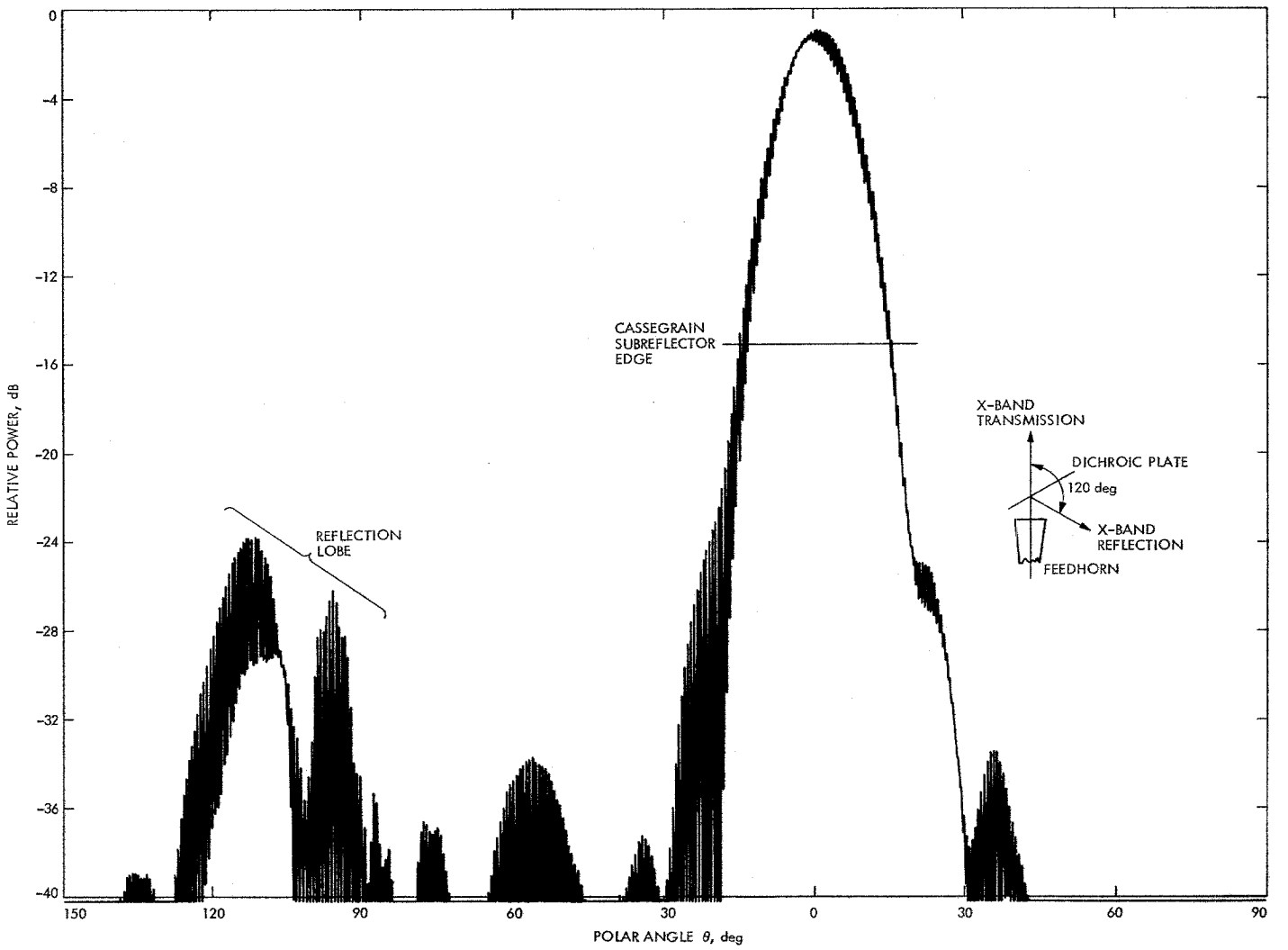

Fig. 6. Corrugated feedhorn/Pyleguide dichroic plate radiation pattern, symmetry plane, 8.415 GHz