Mars Global Surveyor Telecommunications

Jim Taylor, Kar-Ming Cheung, and Chao-Jen Wong

May 1, 2001

JPL DESCANSO

Deep Space Communications and Navigation Systems

Center of Excellence

Design and Performance Summary Series

DESCANSO Design and Performance Summary Series

Article 1

Mars Global Surveyor Telecommunications

Jim Taylor, Kar-Ming Cheung, and Chao-Jen Wong
Jet Propulsion Laboratory,
California Institute of Technology
Pasadena, California

National Aeronautics and
Space Administration

Jet Propulsion Laboratory
California Institute of Technology
Pasadena, California

May 2001

This research was carried out at the
Jet Propulsion Laboratory, California Institute of Technology,
under a contract with the
National Aeronautics and Space Administration.

DESCANSO DESIGN AND PERFORMANCE SUMMARY SERIES

Issued by the Deep-Space Communications and Navigation Systems
Center of Excellence
Jet Propulsion Laboratory
California Institute of Technology

Joseph H. Yuen, Editor-in-Chief

Table of Contents

Foreword ..... *vii*

Preface ..... *ix*

Acknowledgments ..... *ix*

Section 1 Mission Description 1

Section 2 Telecom Overview 3

Section 3 Telecom System Description 4
- 3.1 Uplink (Receiving) Functions 5
  - 3.1.1 Ranging Modulation 6
  - 3.1.2 Command Modulation 6
- 3.2 Downlink (Transmitting) Functions 7
  - 3.2.1 Downlink Carrier 8
  - 3.2.2 Telemetry Modulation 8
  - 3.2.3 Turnaround Ranging 8
  - 3.2.4 Differential One-Way Ranging 8
  - 3.2.5 Ka-Band Link Experiment 9

Section 4 Telecom Subsystem Hardware 10
- 4.1 Transponder 10
- 4.2 High-Gain Antenna 11
- 4.3 Low-Gain Antennas 12
- 4.4 Command-Detector Unit 12
- 4.5 Traveling-Wave-Tube Amplifiers 13
- 4.6 USO 13
- 4.7 Ka-band Link Experiment 13
- 4.8 Radio Frequency Switches 14
- 4.9 Cross-Strap Unit 15

Section 5 Telecom System Performance 16

Section 6 Operational Scenarios 28
- 6.1 Deep Space Network Coverage 28
- 6.2 Command Data Rate and Uplink Carrier 28
- 6.3 Telemetry Data and Downlink Carrier 29
- 6.4 Initial Acquisition 29
- 6.5 Cruise 30
  - 6.5.1 Inner Cruise 30
  - 6.5.2 Outer Cruise 30

6.6 Mars Orbit Insertion 31
6.7 Aerobraking 31
6.8 Mapping 32
6.9 Solar Conjunction 32
6.10 Mars Relay 33
6.11 Safe-Mode Operation 33
6.12 Spacecraft Configurations and Pointing Attitude 34

References 35

Resources 36

Abbreviations and Acronyms 37

List of Figures

Fig. 3-1. MGS major components. 5
Fig. 3-2. MGS operational orientations. 6
Fig. 3-3. MGS X-band telecommunications system functional block diagram. 7
Fig. 4-1. High-gain antenna with X- and Ka-band feed. 11
Fig. 4-2. High-gain antenna pattern. 12
Fig. 4-3. MGS telecom system and KaBLE simplified block diagram. 14
Fig. 5-1. MGS inner cruise: uplink Pt/No and downlink Pt/No (first 160 days). 18
Fig. 5-2. MGS inner cruise: uplink-ranging SNR and downlink-ranging Pr/No. 18
Fig. 5-3. DOY 1997-100 elevation angle and 125-bps command Eb/No. 19
Fig. 5-4. DOY 1997-100 250-bps telemetry Eb/No and downlink carrier Pc/No. 19

List of Tables

Table 3-1. MGS telecommunications components. 4
Table 5-1. Link functions signal-to-noise ratios. 16
Table 5-2. Positive link margin conditions. 17
Table 5-3. MGS inner cruise uplink (command and ranging) design control table. 20
Table 5-4. MGS inner cruise downlink (telemetry and ranging) design control table. 23
Table 5-5. MGS inner cruise ranging performance (uplink and downlink) design control table. 26
Table 6-1. Spacecraft configurations and corresponding attitudes. 34

Foreword

This Design and Performance Summary Series, issued by the Deep Space Communications and Navigation Systems Center of Excellence (DESCANSO), is a companion series to the DESCANSO Monograph Series. Authored by experienced scientists and engineers who participated in and contributed to deep-space missions, each article in this series summarizes the design and performance for major systems such as communications and navigation, for each mission. In addition, the series illustrates the progression of system design from mission to mission. Lastly, it collectively provides readers with a broad overview of the mission systems described.

Joseph H. Yuen
DESCANSO Leader

Preface

This article describes how the Mars Global Surveyor (MGS) spacecraft and the Deep Space Network (DSN) ground systems receive and transmit data. The description is at a functional level, intended to illuminate the unique MGS mission requirements and constraints that led to the design of the communications system, and how it has been operated in flight.

The primary purpose of this article is to provide a reasonably complete single source from which to look up specifics of the MGS radio communications. The article stands as a record for the MGS-mission telecommunications as of April 2001. The MGS spacecraft was fabricated at the Lockheed Martin Astronautics (LMA) plant in Denver, Colorado. The flight team is located at LMA.

Much of the telecom-design information in this article comes from the MGS Design Control Document by Chien-Chung Chen [1]. The mission and operational information has been taken from the MGS website; Kirk Goodall is webmaster.

The article has been reviewed by JPL-telecommunications people involved with MGS design and flight. This article will be updated after review by MGS flight operations at LMA and the Mars Program office at JPL, and as the mission continues.

Acknowledgments

The authors would like to express their appreciation to Gael Squibb in the Interplanetary Network and Information Systems Directorate for his encouragement and support during the preparation of this article. The authors are especially grateful to Stanley Butman, Andre Makovsky, Tom Wilson, and current and former MGS team members for their advice and helpful information.

Section 1

Mission Description

The Mars Global Surveyor (MGS*) mission is part of the Mars Surveyor Program. This program focuses on understanding present and past climate conditions on Mars, determining whether Mars developed prebiotic compounds and life, and identifying useful resources during human expeditions to the surface. Determining the locations and states of water reservoirs today and in the past are key objectives. Missions in the Program are designed to make measurements from orbit, from the surface, and from returned samples. MGS represents a primary-orbiting component of the Program, collecting information on the characteristics and dynamics of the magnetosphere, atmosphere, surface and interior on a global basis. These observations were originally planned to begin in 1998 and last for one Martian year. The observations have continued to the present.

The MGS spacecraft was launched from Cape Canaveral, Florida, on November 7, 1996, aboard a Delta-2/7925 rocket. The 1062-kg spacecraft, built by Lockheed Martin Astronautics, traveled nearly 750 million km over the course of a 300-day cruise to reach Mars on September 11, 1997.

As planned, the MGS prime mission had five main phases:

- Launch
- Cruise
- Orbit insertion
- Mapping
- Relay-phase support

During cruise period, a series of small trajectory-correction maneuvers (TCMs) removed the Mars planetary-protection injection biasing of the upper stage, corrected the trajectory dispersions introduced by the upper stage during injection into the cruise trajectory, and controlled

*Look up this and other abbreviations and acronyms in the list that begins on page 37.

the approach trajectory for Mars orbit insertion. Upon arrival at Mars in September 1997, the spacecraft was inserted into an initial highly elliptic capture orbit.

The original plan called for aerobraking to lower the spacecraft over the next four months to its mapping orbit. Transition into the mapping orbit in fact required a more complex aerobraking campaign that took longer than originally planned in order to minimize risk of damage to one not-quite-deployed solar array. After the mapping orbit was achieved in March 1999, the primary science mission began. This consisted of repetitive observations of the planet’s surface and atmosphere for 687 days (one Martian year). Mars Global Surveyor also was intended to support the International Mars Exploration Program by relaying data from various landers and atmospheric vehicles for a three-year period following the completion of the mapping mission.

On January 31, 2001, NASA celebrated the end of the primary MGS mission. This mission collected more information about the red planet than all previous missions combined. The spacecraft immediately moved into an extended mission phase, continuing to study the planet's topography, seasonal changes, and internal and atmospheric structures [2].

Section 2

Telecom Overview

Spacecraft communications with Earth are at X-band frequencies (7164-MHz uplink, 8420-MHz downlink) for radiometric tracking, return of science and engineering telemetry, commanding, and radio science experiments. In addition, spacecraft telecommunications include a Ka-band (32-GHz) carrier-only downlink for a feasibility demonstration. Primary communications to and from the spacecraft are through a 1.5-m-diameter, high-gain antenna (HGA). Four low-gain antennas (LGA) are also carried for emergency communications—two are transmitting antennas, and two are receiving antennas.

The MGS telecom plan has been for the 34-m high-efficiency antennas (HEF) of the Deep Space Network (DSN) to provide almost all mission-tracking coverage.

To communicate with vehicles on Mars' surface, MGS also carries a:

- UHF* (ultrahigh frequency) antenna
- Beacon transmitter
- Receiver

The operational-scenarios section describes this relay system.

*Look up this and other abbreviations and acronyms in the list that begins on page 37.

Section 3

Telecom System Description

MGS* telecommunications-subsystem components are listed in Table 3-1.

Table 3-1. MGS telecommunications components.

Subsystem Component	Quantity
High-gain antenna (HGA)	1
Low-gain antenna (LGA)	4
Mars Observer transponder (MOT)	2
Command detector unit (CDU)	2
Ultrastable oscillator (USO)	1
Traveling-wave-tube amplifiers (TWTA)	2
Ka-band link experiment (KaBLE)	1

The subsystem also includes RF (radio frequency) and microwave components: diplexer, RF couplers, RF switches, connectors, and waveguides.

Most of the subsystem components, with the exception of the TWTAs and the HGA's X/Ka-band feed are of Mars Observer (MO) heritage. The receiving components (transponders, CDUs, etc.) are mounted on the –x-axis panel of the equipment module (EM). The ultrastable oscillator (USO) is mounted on the nadir equipment deck (NED). To reduce circuit loss, the higher powered components involved in transmitting the downlinks are mounted in a TWTA enclosure attached to the back side (space-facing side) of the high-gain antenna. These components include the traveling-wave tubes (TWTs) and their electronics power supplies, diplexer and RF output select switch, KaBLE up-converter, and Ka-band solid-state power amplifier.

*Look up this and other abbreviations and acronyms in the list that begins on page 37.

The spacecraft carries one HGA and four LGAs. Two of the LGA antennas transmit, and two receive. All the antennas are right-hand circularly polarized (RCP). The axial ratios over the effective beamwidths are 1.5 dB for the HGA, and 8.0 dB for the LGA. The four LGA locations ensure the spacecraft can receive commands and downlink telemetry over a wide attitude orientation range. The primary transmit LGA is mounted on the HGA, and the backup is mounted on the propulsion module's +x-axis side. The two LGA receivers are mounted on the equipment module's –x-axis panel and the propulsion module's +x-axis side.

Prior to the mapping mission phase, the HGA remained body-fixed to the +x-axis side of the spacecraft. Consequently, aiming the HGA directly at Earth required slewing of the whole spacecraft. In preparation for mapping, the 2-m-long HGA boom, mounted on the propulsion module's +x-axis panel, was deployed, allowing the HGA to track Earth using two single-axis gimbals that attached the antenna to the boom.

Figures 3-1 and 3-2 show the spacecraft's major components and orientations.

Figure 3-3 is the telecommunications subsystem functional block diagram.

3.1 Uplink (Receiving) Functions

The nominal uplink-carrier frequency from the DSN station to MGS is 7164.624229 MHz (DSN X-band uplink channel 16). The carrier may be unmodulated or modulated with command or ranging data or both. Phase lock to the uplink carrier is provided. When the receiver is phase locked, its voltage controlled oscillator (VCO) provides a frequency reference to the transponder exciter, to generate a downlink carrier that is two-way coherent with the uplink.

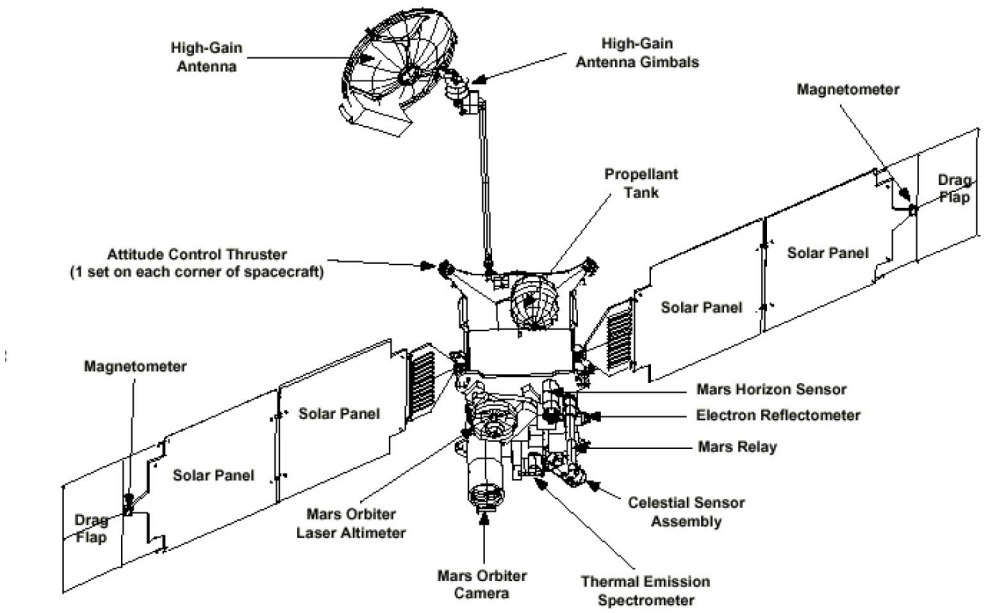

Fig. 3-1. MGS major components.

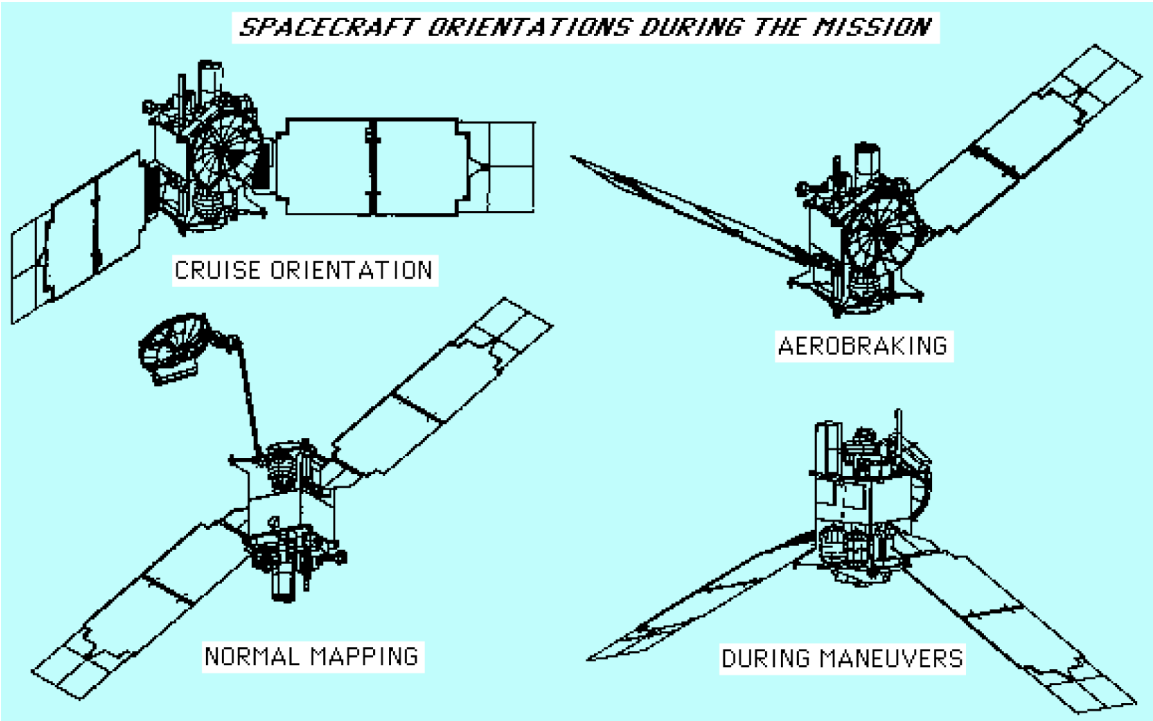

Fig. 3-2. MGS operational orientations.

The receiver portion of the transponder provides an automatic gain control (AGC) to adapt the receiver gain to the received signal strength. The spacecraft receiver AGC and static phase error (SPE) are telemetered as primary uplink performance parameters.

3.1.1 Ranging Modulation

MGS uses standard DSN turnaround sequential-ranging modulation. The receiver demodulates uplink ranging data from the X-band uplink carrier and passes it to the exciter for modulation on the X-band downlink carrier. Valid ranging acquisitions require that the transponder be in the two-way coherent mode.

The MGS transponder provides a standard demodulation/modulation bandwidth of 3 MHz for ranging modulation.

3.1.2 Command Modulation

Several command uplink bit rates, up to 500 bps, are available to accommodate the available link performance. The command bit-stream modulates a 16-kHz subcarrier, which modulates the uplink carrier.

The MGS telecommunications subsystem demodulates nonreturn to zero (NRZ) command data from the command subcarrier and acquires bit timing. The command-detector unit (CDU) outputs to the command decoder the:

- Command data
- Bit clock

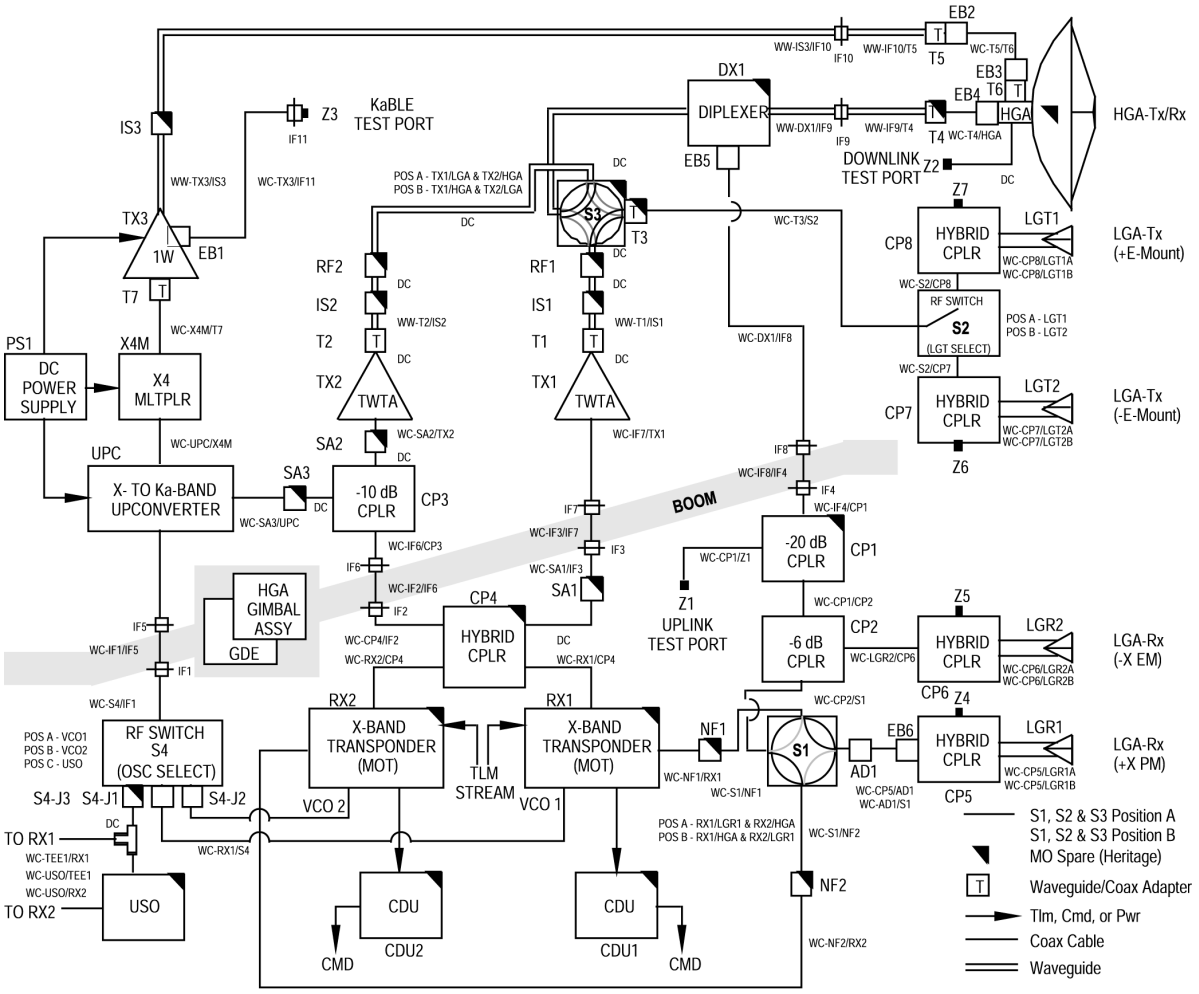

Fig. 3-3. MGS X-band telecommunications system functional block diagram.

- Bit-lock indication

The command decoder is a part of the Command and Data Handling (C&DH) subsystem.

3.2 Downlink (Transmitting) Functions

For two-way tracking, the transponder utilizes the received uplink to coherently generate the downlink-carrier signal at a 880/749 transmit/receive frequency ratio. The transponder can also generate a one-way downlink carrier from its auxiliary oscillator or an external USO. Transfer from a two-way to a one-way downlink is automatic when transponder-receiver lock is lost. The downlink can also be controlled to operate in one-way mode with receiver in lock.

The spacecraft also has an exciter on/off function when no downlink carrier is needed.

3.2.1 Downlink Carrier

The downlink carrier is either unmodulated or modulated with one or more types of data: telemetry subcarrier, turnaround ranging data, or differential one-way ranging (DOR) tones. The downlink X-band carrier frequency is 8417.716050 MHz (DSN channel 16) for coherent operation and 8423.148147 MHz (DSN channel 20) for noncoherent operation via the USO.

A “clean” unmodulated downlink carrier is required for radio science experiments. This has been quantified in terms of the maximum power level of modulation sidebands or spurious signals close to the carrier frequency. Limits, relative to the carrier amplitude in the two most crucial frequency regions, are –70 dB within 500 Hz of the carrier, and –60 dB between 2000 and 5000 Hz. During a single-station pass, the carrier power is required to remain constant within 0.1 dB.

For specifications on the downlink carrier’s spurious-phase modulation, and the 16-kHz command subcarrier’s maximum feedthrough to the downlink carrier, see [1].

3.2.2 Telemetry Modulation

C&DH collects the spacecraft engineering measurements and data from the instruments, formats and encodes the data as a bit stream, modulates it onto a subcarrier, and inputs it to the telecom-system exciter.

The telemetry bit stream is convolutionally coded (rate 1/2, constraint length 7), and the resulting symbol stream modulates a square-wave subcarrier. The system generates either a 21.33-kHz subcarrier (when the symbol rate is 500 symbols per second or lower) or a 320-kHz subcarrier (for symbol rates higher than 500 sps). The selected subcarrier phase modulates the carrier, with a modulation index that provides adequate downlink-carrier power at the station while minimizing the telemetry-demodulation threshold.

3.2.3 Turnaround Ranging

Turnaround-ranging modulation originates at the station. When demodulated from the receiver’s uplink carrier, the ranging signal modulates the downlink carrier with a 12- to 60-deg modulation-index peak.

For a particular set of link conditions, the ranging modulation index is selected to accommodate the required performance of:

- Ranging
- Telemetry
- Carrier.

3.2.4 Differential One-Way Ranging

An onboard differential one-way ranging (DOR) tone generator provides two sine-wave tones that are coherently related to the X-band downlink frequency. The higher frequency tone is 1/440 the carrier frequency (about 19 MHz), and the lower tone is 1/2200 the carrier frequency (about 3.8 MHz) for use in the X-band downlink carrier’s modulation when the DOR

function is turned on by discrete spacecraft command. The DOR tone modulation-index values were set within the transponder during preflight assembly and test.

3.2.5 Ka-Band Link Experiment

The spacecraft accommodates a Ka-Band link experiment to generate coherent downlink carrier at 32 GHz ±0.25 GHz, with minimum impact on the performance and reliability of the X-band communication link. KaBLE is downlink only, and functions essentially as a carrier-frequency converter, changing the X-band downlink carrier and its modulation into a Ka-band downlink carrier with the same modulation [4].

The Ka-band modulation (none, telemetry, ranging, DOR) is identical (including the modulation index values) as on the X-band downlink.

Spacecraft-system design allows all of the KaBLE equipment (frequency up-converter, power supply, and RF amplifier) to be switched on/off via a single ground command.

When KaBLE is operating, the X-band and Ka-band downlinks are simultaneously transmitted via the 1.5-m-diameter HGA and received at Deep Space Station 13 (DSS-13), an experimental 34-m beam-waveguide (BWG) station at Goldstone, California's tracking complex.[1] The experiment allows the performances of the two downlinks to be compared under nearly identical conditions, including a variety of station elevation angles, weather conditions, and (at solar conjunction) Sun-Earth-probe angles.

[1]DSS-13's historical mission has been to: (a) provide a test and demonstration environment for new antenna, microwave, and system instrumentation concepts; and for automation and remote operations applicable to deep-space communications, and (b) support scientific technology development and observations.

Section 4

Telecom Subsystem Hardware

Refer also to the telecom subsystem functional block diagram in Section 3.

4.1 Transponder

The MGS X-band transponder is compatible with the DSN station equipment characteristics in the *Deep Space Mission Systems Design Handbook* (JPL 810-005) [5]. The spacecraft carries two transponders. Each transponder drives a high-power amplifier to provide a downlink via an HGA or LGA.

Each transponder is connected to a low-gain, receive antenna or the HGA to provide separate uplink-command channels.

The transponder accepts discrete C&DH commands to select primary operating modes:

- USO enable/inhibit
- Ranging on/off
- DOR on/off
- Two-way, noncoherent (TWNC) on/off
- Telemetry modulation on/off

Besides providing the C&DH with operating-mode status telemetry, the transponder also produces the following engineering telemetry:

- Received uplink carrier power (AGC)
- Ranging channel AGC
- Receiver static phase error (SPE)
- Receiver current

*Look up this and other abbreviations and acronyms in the list that begins on page 37.

- Receiver VCO temperature
- Auxiliary-oscillator temperature
- Exciter RF output power
- RF switch position indication.

4.2 High-Gain Antenna

The HGA assembly consists of a 1.5-m Cassegrain reflector system with a dual-frequency (X-band and Ka-band) feed horn. Figure 4-1 is a photograph of the HGA, showing the reflector, subreflector, and X- and Ka-band feed.

Reflector, subreflector, and struts are spares from the MO program. The feed horn (by Lockheed Martin Astronautics) is a new design consisting of co-located X- and Ka-band elements; a conical X-band corrugated horn and a disk-on-rod Ka-band element. A radome fabricated of reinforced, germanium-coated Kapton covers the entire HGA aperture to protect the system from the aerobraking thermal environment. Power amplifier and associated components are enclosed and mounted to the back of the HGA structure. The assembly attaches to a HGA gimbal with a dual-canister, cable-management system for pointing control.

Figure 4-2 shows the patterns of relative gain versus off-boresight angle and tabulates the X-band and Ka-band absolute gains at boresight. The HGA's half-power beamwidth is about ±0.8 deg at X-band and about ±0.2 deg at Ka-band. Both the receiver gain-to-temperature ratio (G/T) for the uplink and the effective isotropic radiated power (EIRP) for the downlink are computed based on the antenna gain.

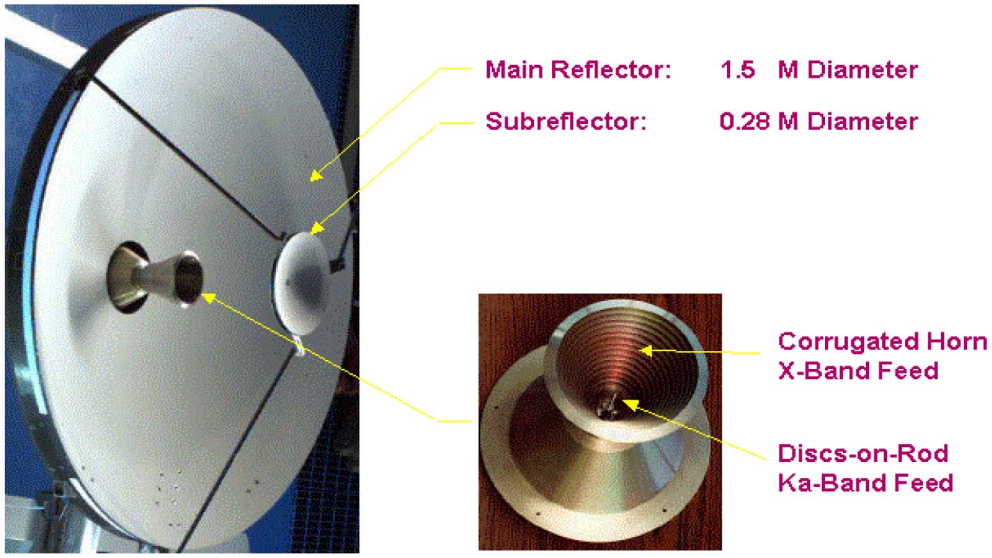

Fig. 4-1. High-gain antenna with X- and Ka-band feed.

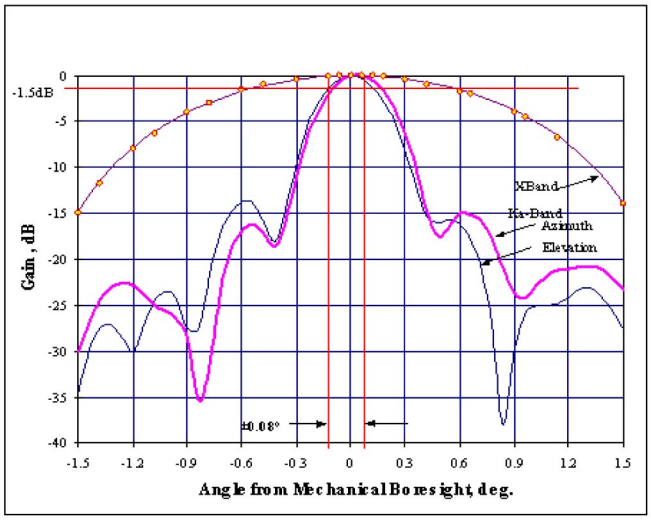

Frequency	Gain	Polarization
7.2 GHz:	37.4 dBi	RHCP
8.4 GHz:	39.0 dBi	RHCP
32.0 GHz :	49.0 dBi	RHCP

Fig. 4-2. High-gain antenna pattern.

4.3 Low-Gain Antennas

The LGAs are lightweight, low-cost microstrip-patch antennas with both missile and spacecraft program heritage. Each LGA has a boresight gain of about 6.5 dBi (X-band uplink and downlink) and a half-power beamwidth of about ±40 deg.

The LGA design's environmental history includes:

- Shock to 16,000-G peak on the Peacekeeper program,
- Vibration to 525-G root-mean-square (rms) on the Titan IV program, and
- Thermal atmosphere requirements to ±150 °C for the Small ICBM program.

4.4 Command-Detector Unit

The CDU demodulates the command signal obtained from the transponder receiver and detects the command bits. The command-bit rates range in powers of 2 from 7.8125 bps to 500 bps. The bit rate can be changed in flight by a real-time or stored command to the CDU.

CDU-detected command data, bit timing, and lock status are provided to the uplink board in the Controls Interface Unit (CIU). Telemetry is sent to the Engineering Data Formatter (EDF) to allow monitoring of CDU performance in flight. Among the engineering channels from the CDU are CDU lock status, single event upset (SEU) reset indicator, and data rate.

4.5 Traveling-Wave-Tube Amplifiers

The RF downlink output of the selected transponder exciter is routed through a 3-dB hybrid to the two TWTAs. Each TWTA consists of TWT together with its power supply, control circuit, and interconnecting cables in an enclosure. Drawing no more than 60-W of spacecraft power, each TWTA is designed to provide at least 25 W of saturated output power at the end of its useful life.

Separate commands are available to turn the TWT filament on and off, and there is a toggle command to turn the high voltage on and off. The filament "on" command switches off the high voltage, starts a 220-s timer (for filament warm-up), and locks out high-voltage commands until the warm-up timer times out.

The TWTA provides engineering measurements of helix current and anode voltage, as well as status indicators for filament on/off and high-voltage on/off.

4.6 USO

The MGS USO achieves its stability through precise control of the temperature of the frequency-determining crystal. The crystal and oscillator circuitry are enclosed within a vacuum chamber. An oven controls chamber temperature.

4.7 Ka-band Link Experiment

The KaBLE is also of MO heritage, though with higher EIRP [4]. Figure 4-3 is a simplified MGS telecom system functional block diagram.[1] Note that the KaBLE-specific components are shaded.

KaBLE hardware includes the following:

- RF input select switch
- Two frequency multipliers (×22 and ×4)
- Frequency down-converter
- Ka-band solid-state power amplifier

The RF input select switch controls the source of the Ka-band downlink frequency. The three switch positions are 2f1 (reference frequency in transponder) output from (a) transponder 1 VCO, (b) transponder 2 VCO, or (c) the USO.

The ×22 frequency multiplier provides a 44f1 output from the input select switch. The ×4 multiplier provides a 3344f1 output from the down-converter's 836f1 output.

The down-converter mixes the 880f1 output from the transponder and the 44f1 output of the ×22 multiplier, to produce an 836f1 output.

The power amplifier provides an RF output of about 1 W. The actual KaBLE specification is for a minimum EIRP of 79 dBm.

[1] This figure is in the KaBLE article at http://tmo.jpl.nasa.gov/tmo/progress_report/42-137/title.htm.

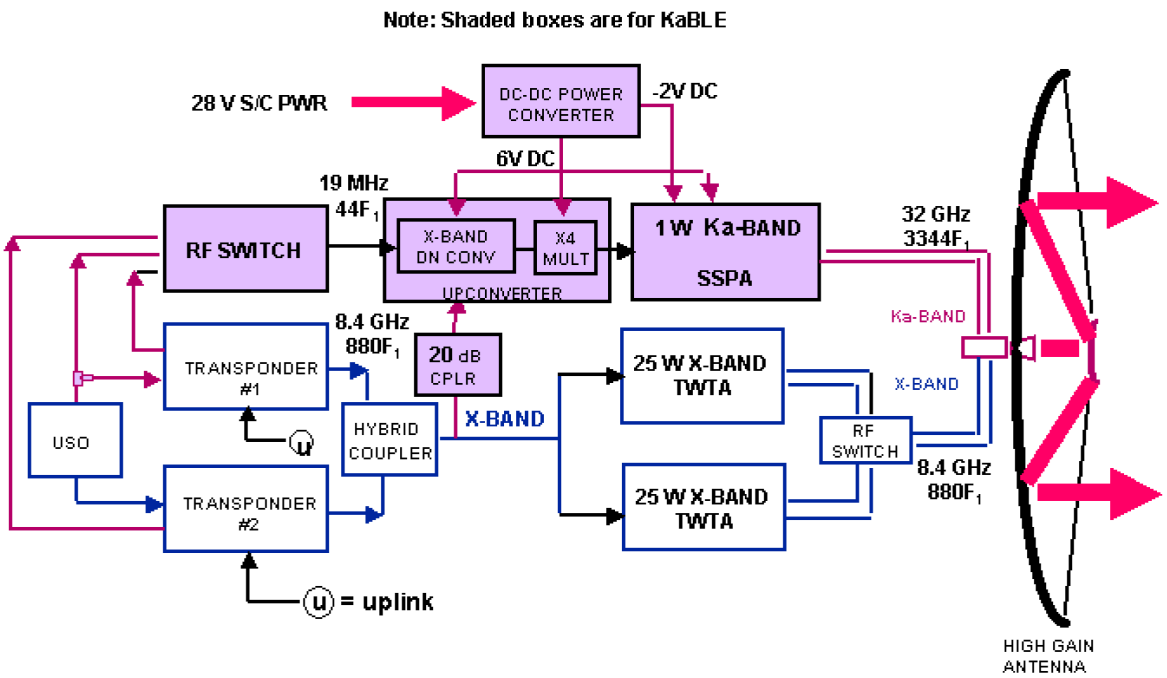

Fig. 4-3. MGS telecom system and KaBLE simplified block diagram.

Depending on the RF input switch position, the amplified Ka-band output will have a nominal frequency between 31.987 GHz and 32.008 GHz.

The KaBLE provides two telemetry measurements: RF input select switch position and power-amplifier temperature.

4.8 Radio Frequency Switches

The subsystem has four RF switches: (a) receiver input select, (b) transmit LGA select, (c) X-band downlink output select, and (d) KaBLE input select (discussed above)

The receiver input select switch has two positions:

- From HGA/LGA-receive-2 to transponder 2 and LGA-receive-1 to transponder 1
- From HGA/LGA-receive-2 to transponder 1 and LGA-receive-1 to transponder 2

The transmit LGA select switch routes X-band downlink to LGA-transmit-1 or to LGA-transmit-2.

The X-band output select switch has two positions:

- TWTA-2 to HGA and TWTA-1 to LGA
- TWTA-1 to HGA and TWTA-2 to LGA.

4.9 Cross-Strap Unit

The cross-strap unit (XSU) provides switched digital signal and timing interfaces in the C&DH. Although technically not part of the telecom subsystem, the XSU performs functions that affect the telecom link performance. As implied by the “cross-strap” name, one such function is to route redundant C&DH data to the redundant transponders. Other telecom-related functions are to encode the data stream into symbols for downlinking, produce a subcarrier frequency, modulate the symbol stream on the subcarrier, and establish a subcarrier output level to determine modulation index.

The switched interfaces, C&DH PDS (payload data system) and EDF (engineering data formatter), provide output connections to the four solid-state recorders (SSRs), and two transponders for real-time downlink. They also connect the SSRs to the transponders for later playback. The XSU also provides amplitude control of the modulated telemetry subcarrier from C&DH to the transponder exciter.

Section 5

Telecom System Performance

The spacecraft provides X-band communications to and from Earth for radiometric tracking, telemetry, commanding, and radio science compatible with tracking station configurations and performance defined in the DSMS* *Telecommunications Link Design Handbook* [5].

MGS communication-link margins are computed using link-budget techniques and statistical criteria in *Deep Space Telecommunications Systems Engineering* [6]. MGS specifics are in the *MGS Telecom System Operations Reference Handbook*, [1].

Each link's performance can be predicted using standard Telecom Forecaster Predictor (TFP) software [7], a Matlab-based multimission tool for link-performance prediction. The MGS TFP uses standard DSN "common models" for station parameters, and was adapted to include MGS spacecraft models.

The three MGS link functions are command, telemetry, and ranging. Each has a minimum signal-to-noise ratio (SNR, called the threshold, Table 5-1) at which the link quality meets project-defined criteria. SNRs are expressed in terms of noise spectral density (No), a 1-Hz reference bandwidth's noise power.

Table 5-1. Link functions signal-to-noise ratios.

Carrier tracking	Pc/No, where Pc = carrier power
Command data	Eb/No, where Eb = energy per command bit
Telemetry data	Es/No, where Es = energy per telemetry symbol
Turnaround ranging	Pr/No, where Pr = downlink ranging power

Link performance is bookkept using a design control table (DCT). Inflight MGS operations are based on a criterion of positive link margin under the conditions listed in Table 5-2.

*Look up this and other abbreviations and acronyms in the list that begins on page 37.

Table 5-2. Positive link margin conditions.

Command	Mean minus 3-sigma
Telemetry	Mean minus 2-sigma
Turnaround ranging	Mean minus 2-sigma

The parameter sigma refers to the standard deviation of the command Eb/No, the telemetry Es/No, or the downlink ranging Pr/No.

The three following DCTs (design control tables: 5-3, 5-4, and 5-5) are TFP predictions of MGS telecom performance on April 10, 1997 at 15:00 UTC ERT during inner cruise in nominal mode. The DCTs show the results of tracking the MGS spacecraft with DSS-65 (the 34 high-efficiency antenna [HEF] station at Madrid) early in the pass. For these DCTs, the spacecraft is configured for X-band uplink and downlink on the LGA-1. The command rate is 125 bps, at an uplink modulation index of 1.2 rad. Ranging modulation also phase modulates the uplink, with a carrier suppression of 3 dB. The downlink rate is 250 bps, at a modulation index of 59.9 deg. Ranging also phase modulates the downlink, at an index of 0.4 rad.

While the DCT shows details of end-to-end performance at one point in time, TFP can also output predictions of quantities from the DCT as a function of time. This can be in the form of tabulations (which are intended to be read into a spreadsheet for formatting and printing) or as plot images.

Figures 5-1–5-4 illustrate the time-variable MGS link performance during cruise.

Figures 5-1 and 5-2 were made for a fixed elevation angle of 10 deg, near the minimum that a station would be asked to support. Figure 5-1 shows the fundamental link quantities of uplink Pt/No and downlink Pt/No. Figure 5-2 shows the uplink ranging SNR and the downlink Pr/No. These figures have one point per day from 1996-330 through 1997-100.

Figures 5-3 and 5-4 show the elevation angle dependent performance for a DSS-65 pass that begins on 1997-100/15:00 UTC and ends at 1997-101/03:00 UTC, thus spanning the full view period of elevation angles.

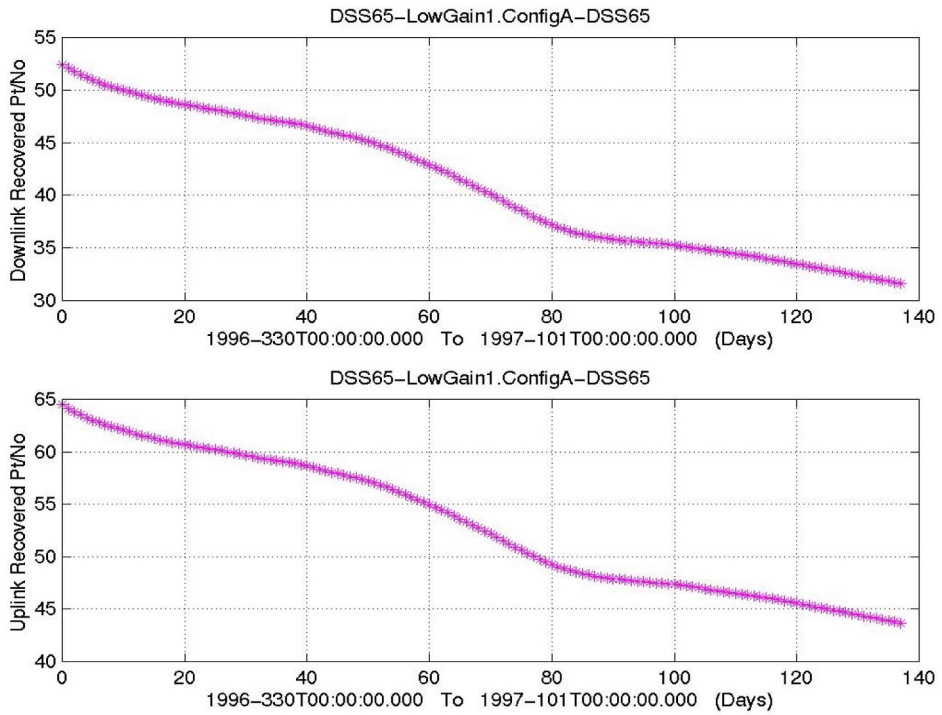

Fig. 5-1. MGS inner cruise: uplink Pt/No and downlink Pt/No (first 160 days).

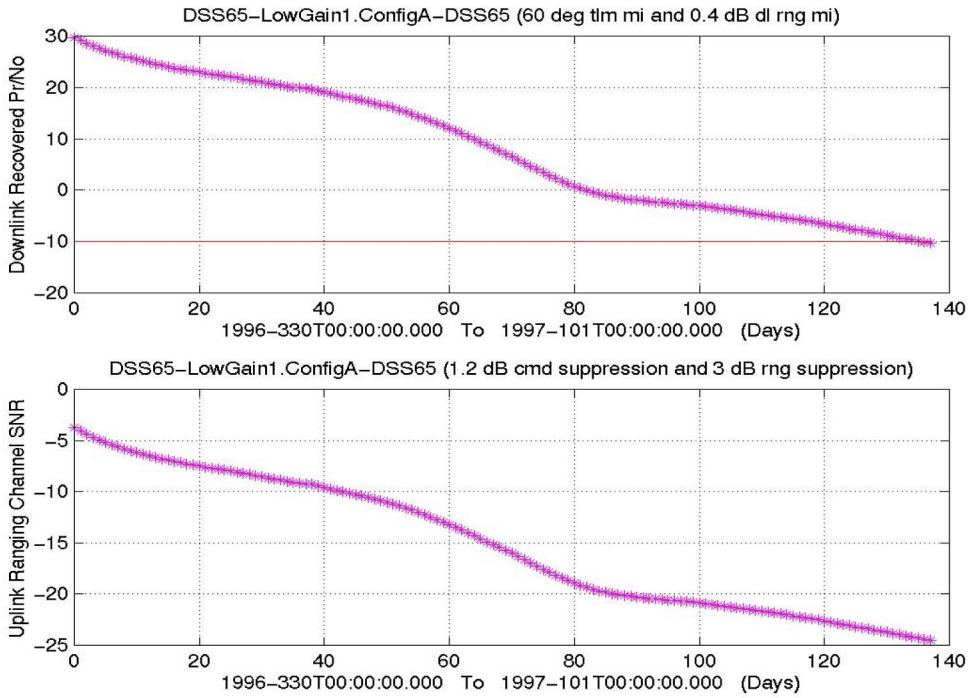

Fig. 5-2. MGS inner cruise: uplink-ranging SNR and downlink-ranging Pr/No.

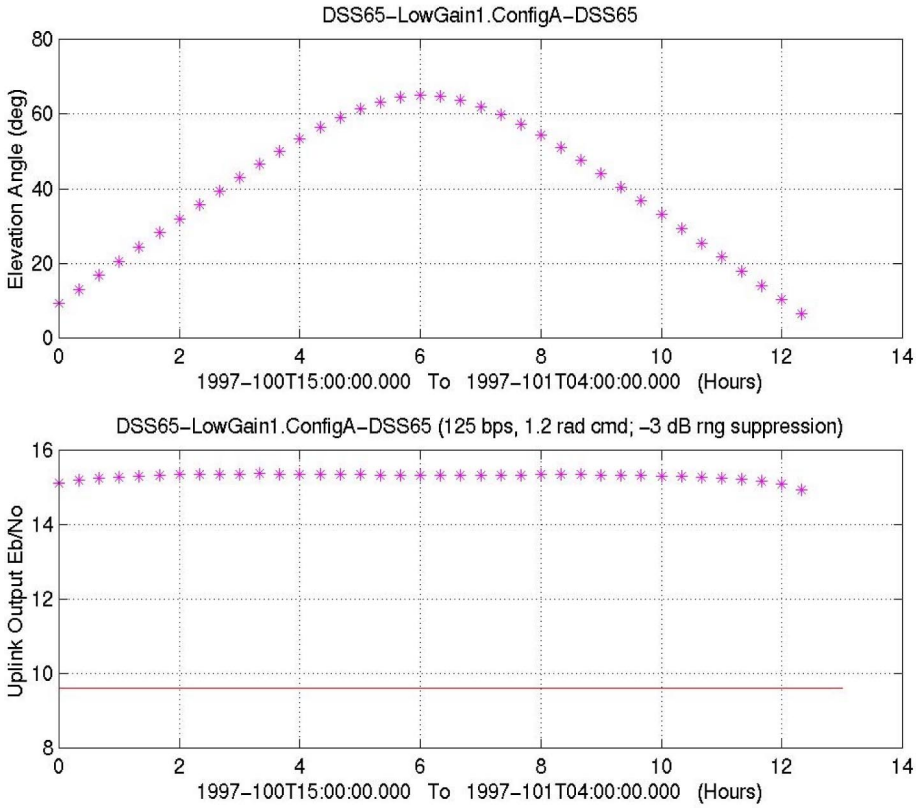

Fig. 5-3. DOY 1997-100 elevation angle and 125-bps command Eb/No.

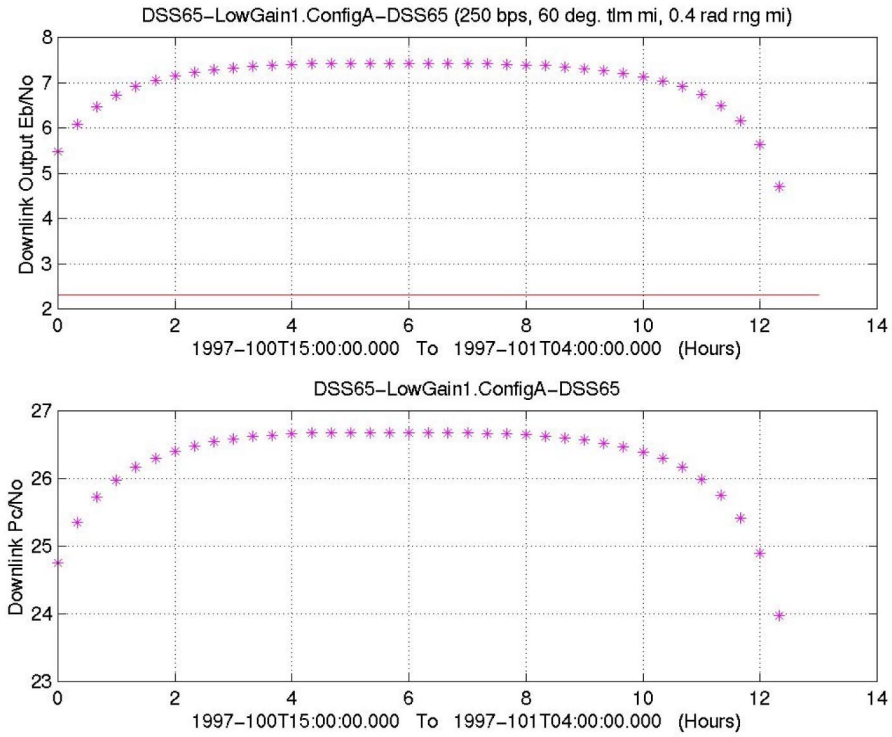

Fig. 5-4. DOY 1997-100 250-bps telemetry Eb/No and downlink carrier Pc/No.

Table 5-3. MGS inner cruise uplink (command and ranging) design control table.

Produced by MGS V1.1 11/22/1999				
Predict	1997-100T15:00:00.000 UTC			
Up-/downlink	Two-way			
RF band	X:X			
Telecom Link	DSS-65-lowGain1.ConfigA-DSS-65			
COMMAND UP-LINK PARAMETER INPUTS				
Cmd data rate	125.0000 bps			
Cmd mod index	1.20 rad			
Cmd rngmod index	44.9 deg			
Operations mode	Nominal			
Mission phase	Inner cruise			
DSN site	Madr-madr			
DSN elevation	In view			
Weather/CD	25			
Attitude pointing	Heuristics			
EXTERNAL DATA				
Range	(km)	6.7119e+07		
Range	(AU)	4.4866e–01		
One-way light time	(hh:mm:ss)	00:03:43		
Station elevation(s)	(deg)	[9.23]		
DOFF: HGA, LGA1, LGA2	(deg)	22.27	22.27	157.73
Clk: HGA, LGA1, LGA2	(deg)	193.43	193.43	0.00
Added s/c ant pnt offset	(deg)	0		
DSN site considered:	DSS-65/DSS-65			
At time:	0.00 hours after the start time			

(Continued on next page)

Table 5-3. MGS inner cruise uplink (command and ranging) design control table (cont'd).

Link Parameter	Unit	Design Value	Fav Tol	Adv Tol	Mean Value	Var
TRANSMITTER PARAMETERS						
1. Total transmitter power	dBm	73.00	0.00	–1.00	72.67	0.0556
2. Xmitter waveguide loss	dB	–0.25	0.05	–0.05	–0.25	0.0004
3. DSN antenna gain	dBi	67.05	0.20	–0.20	67.05	0.0133
4. Antenna pointing loss	dB	–0.10	0.10	–0.10	–0.10	0.0017
5. EIRP (1 + 2 + 3 + 4)	dBm	0.00	0.00	0.00	139.37	0.0710
PATH PARAMETERS						
6. Space loss	dB	–266.09	0.00	0.00	–266.09	0.0000
7. Atmospheric attenuation	dB	–0.26	0.00	0.00	–0.26	0.0000
RECEIVER PARAMETERS						
8. Polarization loss	dB	–0.23	0.10	–0.10	–0.23	0.0033
9. S/C ant pnt control loss	dB	0.00	1.00	–1.00	0.00	0.3333
10. Usage (off-boresight) loss	dB	–1.13	0.50	–0.50	–1.13	0.0833
11. S/C antenna gain (design)	dBi	6.60	0.20	–0.20	6.60	0.0067
12. Lumped circuit loss	dB	–5.33	0.30	–0.30	–5.33	0.0300
TOTAL POWER SUMMARY						
13. Tot rcvd pwr (5 + 6 + 7 + 8 + 9 + 10 + 11 + 12)	dBm	0.00	0.00	0.00	–127.07	0.5276
14. Noise spectral density	dBm/Hz	–170.82	–0.16	0.49	–170.71	0.0194
15. System noise temperature	K	600.12	–21.88	72.12	616.87	403.2178
16. Received pt/no (13–14)	dB-Hz	0.00	0.00	0.00	43.64	0.5470
17. Required pt/no	dB-Hz	38.13	–1.50	1.50	38.13	0.2501
18. Performance margin (16–17)	dB	0.00	0.00	0.00	5.51	0.7971
19. Sigma	dB	0.00	0.00	0.00	0.89	0.0000
20. Margin –3 sigma (18–3*19)	dB	0.00	0.00	0.00	2.83	0.0000

(Continued on next page)

Table 5-3. MGS inner cruise uplink (command and ranging) design control table (cont'd).

Link Parameter	Unit	Design Value	Fav Tol	Adv Tol	Mean Value	Var
CARRIER PERFORMANCE						
21. Recovered pt/no (16 + [AGC + BPF])	dB-Hz	0.00	0.00	0.00	43.64	0.5470
22. Command carrier suppression	dB	–3.46	0.20	–0.20	–3.46	0.0067
23. Ranging carrier suppression	dB	–3.00	0.10	–0.10	–3.00	0.0017
24. Carrier power (AGC)	dBm	0.00	0.00	0.00	–133.53	0.5360
25. Received pc/no (21 + 22 + 23)	dB-Hz	0.00	0.00	0.00	37.18	0.5553
26. Carrier loop noise BW	dB-Hz	16.86	–0.20	0.15	16.83	0.0102
27. Carrier loop SNR (25–26)	dB	0.00	0.00	0.00	20.35	0.5655
28. Recommended carrier loop SNR	dB	0.00	0.00	0.00	12.00	0.0000
29. Carrier loop SNR margin (27–28)	dB	0.00	0.00	0.00	8.35	0.5655
CHANNEL PERFORMANCE						
30. Command data suppression	dB	–3.04	0.17	–0.18	–3.04	0.0051
31. Ranging data suppression	dB	–3.00	0.10	–0.10	–3.00	0.0017
32. Received pd/no (21 + 30 + 31)	dB-Hz	0.00	0.00	0.00	37.60	0.5538
33. 3-Sigma pd/no (32–3* sqrt [32 var])	dB-Hz	0.00	0.00	0.00	35.37	0.0000
34. Data rate (dB-Hz)	dB-Hz	20.97	0.00	0.00	20.97	0.0000
35. Available eb/no (32–34)	dB	0.00	0.00	0.00	16.63	0.5538
36. Implementation loss	dB	1.50	–0.80	0.80	1.50	0.2133
37. Radio loss	dB	0.03	–0.30	0.30	0.03	0.0300
38. Output eb/no (35–36–37)	dB	0.00	0.00	0.00	15.11	0.7971
39. Required eb/no	dB	9.60	0.00	0.00	9.60	0.0000
40. Performance margin (38–39)	dB	0.00	0.00	0.00	5.51	0.7971
41. Sigma	dB	0.00	0.00	0.00	0.89	0.0000
42. Margin –3 sigma (40–3*41)	dB	0.00	0.00	0.00	2.83	0.0000
43. BER (from 38)	none	4.2025e–16				

Table 5-4. MGS inner cruise downlink (telemetry and ranging) design control table.

Produced by MGS V1.1 11/22/1999				
Predict	1997-100T15:00:00 UTC			
Up-/downlink	Two-way			
RF band	X:X			
Diplex mode	Diplex			
LNA selection	LNA-1			
Telecom link	DSS-65-lowGain1.ConfigA-DSS-65			
TELEMETRY DOWN-LINK PARAMETER INPUTS				
Encoding	Reed-Solomon (250,218) concatenated with C.E. (7,½)			
Carrier tracking	Residual			
Oscillator	2-way VCO			
Subcarrier mode	Squarewave			
PLL bandwidth	0.50 Hz			
Telemetry usage	Engineering (ENG)—real time			
Telemetry data rate/mod index	250 bps/59.90 deg			
Telemetry rng/DOR mod index	0.40 rad/off rad			
Operations mode	Nominal			
Mission phase	Inner cruise			
DSN site	Madr-madr			
DSN elevation	In view			
Weather/CD	25			
Attitude pointing	Heuristics			
EXTERNAL DATA				
Range	(km)	6.7119e+07		
Range	(AU)	4.4866e–01		
One-way light time	(hh:mm:ss)	00:03:43		
Station elevation(s)	(deg)	[9.23]		
DOFF: HGA, LGA1, LGA2	(deg)	22.27	22.27	157.73
Clk: HGA, LGA1, LGA2	(deg)	193.43	193.43	0.00
Added s/c ant pnt offset	(deg)	0		
DSN site considered:	DSS-65/DSS-65			
At time:	0.00 hours after the start time			

(Continued on next page)

Table 5-4. MGS inner cruise downlink (telemetry and ranging) design control table (cont'd).

Link Parameter	Unit	Design Value	Fav Tol	Adv Tol	Mean Value	Var
TRANSMITTER PARAMETERS						
1. Spacecraft RF xmit power	dBm	44.23	0.50	–0.50	44.23	0.0417
2. Xmitter circuit loss	dB	–1.37	0.30	–0.30	–1.37	0.0300
3. Antenna gain	dBi	7.10	0.20	–0.20	7.10	0.0067
4. Usage (off-boresight) loss	dB	–1.13	0.50	–0.50	–1.13	0.0833
5. Pointing control loss	dB	0.00	1.00	–1.00	0.00	0.3333
6. EIRP (1 + 2 + 3 + 4 + 5)	dBm	0.00	0.00	0.00	48.83	0.4950
PATH PARAMETERS						
7. Space loss	dB	–267.49	0.00	0.00	–267.49	0.0000
8. Atmospheric attenuation	dB	–0.26	0.00	0.00	–0.26	0.0000
RECEIVER PARAMETERS						
9. DSN antenna gain	dBi	68.10	0.20	–0.20	68.10	0.0133
10. DSN antenna pnt loss	dB	–0.10	0.10	–0.10	–0.10	0.0033
11. Polarization loss	dB	–0.18	0.10	–0.10	–0.18	0.0033
TOTAL POWER SUMMARY						
12. Tot rcvd pwr (6 + 7 + 8 + 9 + 10 + 11)	dBm	0.00	0.00	0.00	–151.10	0.5150
13. SNT at zenith	K	26.65	–2.00	2.00	26.65	0.6667
14. SNT due to elevation	K	1.44	0.00	0.00	1.44	0.0000
15. SNT due to atmosphere	K	15.48	0.00	0.00	15.48	0.0000
16. SNT due to the Sun	K	0.00	0.00	0.00	0.00	0.0000
17. SNT due to other hot bodies	K	0.00	0.00	0.00	0.00	0.0000
18. SNT (13 + 14 + 15 + 16 + 17)	K	43.57	–2.00	2.00	43.57	0.4444
19. Noise spectral density	dBm/Hz	–182.21	–0.20	0.19	–182.21	0.0044
20. Available pt/no (12–19)	dB-Hz	0.00	0.00	0.00	31.11	0.5194
21. Required pt/no ("favorite" mod index)	dB-Hz	27.94	–0.28	0.28	27.94	0.0085
22. Performance margin (20–21)	dB	0.00	0.00	0.00	3.17	0.5279
23. Sigma	dB	0.00	0.00	0.00	0.73	0.0000
24. Margin –2 sigma (22–2*23)	dB	0.00	0.00	0.00	1.72	0.0000

(Continued on next page)

Table 5-4. MGS inner cruise downlink (telemetry and ranging) design control table (cont'd).

Link Parameter	Unit	Design Value	Fav Tol	Adv Tol	Mean Value	Var
CARRIER PERFORMANCE						
25. Recovered pt/no (20 + [AGC + BPF])	dB-Hz	0.00	0.00	0.00	31.11	0.5194
26. Telemetry carrier suppression	dB	–5.99	0.62	–0.69	–6.02	0.0717
27. Ranging carrier suppression	dB	–0.34	0.05	–0.05	–0.34	0.0004
28. DOR carrier suppression	dB	0.00	0.00	0.00	0.00	0.0000
29. Carrier power (AGC) (12 + 26 + 27 + 28)	dBm	0.00	0.00	0.00	–157.46	0.5871
30. Received pc/no (25 + 26 + 27 + 28)	dB-Hz	0.00	0.00	0.00	24.75	0.5915
31. Carrier loop noise BW	dB-Hz	–3.01	0.00	0.00	–3.01	0.0000
32. Carrier loop SNR (30–31)	dB	0.00	0.00	0.00	27.76	0.5915
33. Recommended carrier loop SNR	dB	0.00	0.00	0.00	12.00	0.0000
34. Carrier loop SNR margin (32–33)	dB	0.00	0.00	0.00	15.76	0.5915
TELEMETRY PERFORMANCE						
35. Telemetry data suppression	dB	–1.26	0.21	–0.23	–1.27	0.0081
36. Ranging data suppression	dB	–0.34	0.05	–0.05	–0.34	0.0004
37. DOR data suppression	dB	0.00	0.00	0.00	0.00	0.0000
38. Data pd/no (25 + 35 + 36 + 37)	dB-Hz	0.00	0.00	0.00	29.50	0.5279
39. Two sigma pd/no (38–2*sqrt [38 var])	dB-Hz	0.00	0.00	0.00	28.05	0.0000
40. Data rate (dB-Hz)	dB-Hz	23.98	0.00	0.00	23.98	0.0000
41. Available eb/no (38–40)	dB	0.00	0.00	0.00	5.53	0.5279
42. Subcarrier demod loss	dB	0.02	0.00	0.00	0.02	0.0000
43. Symbol sync loss	dB	0.01	0.00	0.00	0.01	0.0000
44. Radio loss	dB	0.01	–0.00	0.01	0.01	0.0000
45. Output eb/no	dB	0.00	0.00	0.00	5.48	0.5279
46. Required eb/no	dB	2.31	0.00	0.00	2.31	0.0000
47. Performance margin	dB	0.00	0.00	0.00	3.17	0.5279
48. Sigma	dB	0.00	0.00	0.00	0.73	0.0000
49. Margin –2 sigma	dB	0.00	0.00	0.00	1.72	0.0000
50. BER of conv decoder	none	1.1088e-08				

Table 5-5. MGS inner cruise ranging performance (uplink and downlink) design control table.

Produced by MGS V1.1 11/22/1999				
Predict	1997-100T15:00:00 UTC			
Up-/downlink	Two-way			
RF band	X:X			
Diplex mode	Diplex			
LNA selection	LNA-1			
Telecom link	DSS-65-lowGain1.ConfigA-DSS-65			
COMMAND UP-LINK PARAMETER INPUTS				
Cmd data rate	125.0000 bps			
Cmd mod index	1.20 rad			
Cmd rngmod index	44.9 deg			
TELEMETRY DOWN-LINK PARAMETER INPUTS				
Encoding	Reed-Solomon (250,218) concatenated with C.E. (7,½)			
Carrier tracking	Residual			
Oscillator	2-way VCO			
Subcarrier mode	Squarewave			
PLL bandwidth	0.50 Hz			
Telemetry usage	Engineering (ENG)—real time			
Telemetry data rate/mod index	250 bps/59.90 deg			
Telemetry rng/DOR mod index	0.40 rad/off rad			
DSN site	Madr-madr			
DSN elevation	In view			
Weather/CD	25			
Attitude pointing	Heuristics			
EXTERNAL DATA				
Range	(km)	6.7119e+07		
Range	(AU)	4.4866e–01		
One-way light time	(hh:mm:ss)	00:03:43		
Station elevation(s)	(deg)	[9.23]		
DOFF: HGA, LGA1, LGA2	(deg)	22.27	22.27	157.73
Clk: HGA, LGA1, LGA2	(deg)	193.43	193.43	0.00
Added s/c ant pnt offset	(deg)	0		
DSN site considered:	DSS-65/DSS-65			
At time:	0.00 hours after the start time			

(Continued on next page)

Table 5-5. MGS inner cruise ranging performance (uplink and downlink) design control table (cont'd).

Link Parameter	Unit	Design Value	Fav Tol	Adv Tol	Mean Value	Var
UPLINK TURNAROUND RANGING CHANNEL						
1. UL recovered pt/no	dB-Hz	43.64	2.22	–2.22	43.64	0.5470
2. UL cmd ranging suppression	dB	–3.46	0.20	–0.20	–3.46	0.0067
3. UL ranging suppression	dB	–3.03	0.10	–0.10	–3.03	0.0033
4. UL pr/pt (2 + 3)	dB	–6.49	–0.30	0.30	–6.49	0.0100
5. UL filtering loss	dB	–0.91	–0.20	–0.20	–0.91	0.0067
6. UL output pr/no (1 + 4 + 5)	dB-Hz	36.24	2.25	–2.25	36.24	0.5637
7. Ranging channel noise BW	dB-Hz	60.79	0.00	0.00	60.79	0.0000
8. UL ranging SNR (6–7)	dB	–24.55	–2.25	2.25	–24.55	0.5637
DOWNLINK RANGING CHANNEL						
9. DL recovered pt/no	dB-Hz	31.11	2.16	–2.16	31.11	0.5194
10. DL tlm ranging suppression	dB	–5.99	0.62	–0.69	–6.02	0.0717
11. DL ranging suppression	dB	–35.96	2.82	–2.88	–35.98	1.3559
12. DL pr/pt (10 + 11)	dB	–42.00	–3.58	3.58	–42.00	1.4276
13. DL received pr/no (9 + 12)	dB-Hz	–10.89	–4.19	4.19	–10.89	1.9470
14. DL noisy ref loss	dB	0.00	0.00	0.00	0.00	0.0000
15. DL output pr/no (13 + 14)	dB-Hz	–10.89	–4.19	4.19	–10.89	1.9470
16. DL out pr/no sigma	dB-Hz	0.00	0.00	0.00	1.40	0.0000
17. DL out pr/no mean-2 sigma	dB-Hz	–13.68	0.00	0.00	–13.68	0.0000
18. DL required pr/no	dB-Hz	–10.00	0.00	0.00	–10.00	0.0000
19. Ranging margin, mean (15–18)	dB-Hz	–0.89	–4.19	4.19	–0.89	1.9470
20. Ranging margin, mean –2 sigma (17–18)	dB-Hz	–3.68	–0.00	0.00	–3.68	0.0000

Section 6

Operational Scenarios

Note: this section is based on information available from the MGS website [2] and largely reflects plans made before launch and early in the mission. The operational scenarios will be updated by mid-2001 to incorporate as-flown operational experience from LMA's* flight team.

Refer also to spacecraft configuration and orientation sketches in Fig. 3-1 and 3-2.

6.1 Deep Space Network Coverage

The Deep Space Network's 34-m HEF antennas provide nearly all tracking coverage. This type of antenna has been scheduled because it both transmits and receives X-band signals and provides adequate uplink and downlink performance. The 34-m BWG antennas (4-kW instead of 20-kW X-band transmitters) may also be used in case of scheduling conflicts with other projects. Additionally, 70-m antenna coverage may be needed to support the mission when the spacecraft is operating in safe mode, or when additional data-reception capability is required. By late 2000, X-band transmitters were in operational use at the Goldstone and Canberra (Australia) 70-m stations.

MGS conducted the KaBLE with the support of the DSS-13 experimental station [4]. By 1998, the operational 34-m BWG station at Goldstone, DSS-25, could also support Ka-band downlink.

6.2 Command Data Rate and Uplink Carrier

The MGS command data rate can be set from as low as 7.8125 bps (in emergency situations over the LGA) to as high as 500 bps, with a normal rate of 125 bps. The maximum recommended uplink-modulation index for MGS is 1.2 rad. As with most spacecraft, the uplink has significantly more margin than the downlink. Use of a 1.2-dB rad command-modulation index,

*Look up this and other abbreviations and acronyms in the list that begins on page 37.

compared with the maximum 1.4-rad capability of the DSN, results in 0.7 dB less command-data power but produces a higher power in the carrier channel. The uplink-modulation index trade-off increased the power in the received uplink carrier for two-way Doppler performance[1] and reduced the likelihood of dropping uplink-carrier lock.

6.3 Telemetry Data and Downlink Carrier

CD&H produces, encodes, and modulates on the carrier, the MGS telemetry datastream; the telecom subsystem then downlinks it. The three telemetry data-stream types are:

- Spacecraft Bus Engineering (ENG)—datastream intended for monitoring spacecraft-subsystem performance. ENG is recorded for later playback or transmitted real time.[2]
- Science and Engineering 1 (S&E-1)—combined science- and engineering-datastream that can be recorded for later playback or returned in real time.
- Science and Engineering 2 (S&E-2)—high-rate combined science-and engineering-datastream for real-time transmission only

In the C&DH, S&E data streams are first encoded with a (250,218) Reed-Solomon code. All three downlink data-stream types are (7,1/2) convolutionally encoded before transmission.

In the XSU, the convolutionally encoded NRZ-L symbol stream is mixed (multiplied) with a square-wave subcarrier at either 320 kHz or 21.33 kHz. The XSU then sets the voltage of the modulated subcarrier to one of 16 voltage levels for input to the transponder-phase modulator, corresponding to modulation-index values between 42 and 80 deg. The modulated-subcarrier waveform is summed with the turn-around ranging signal or DOR tone signal, and modulated onto the X-band downlink carrier. The downlink carrier is on DSN Channel 16 (8417.716 MHz), except when it comes from the USO, in which case it is on DSN Channel 20 (8423.148 MHz).

6.4 Initial Acquisition

Before liftoff, the initial-command sequence was stored onboard. When it clocked out, the sequence directed the spacecraft to turn on the X-band downlink, select the LGA, and begin transmitting real-time engineering data at 2000 bps. Once downlink-carrier lock was achieved, the downlink rate itself would allow the flight team to determine whether the spacecraft had

[1] This article uses “Doppler” as a single-word term for a type of radiometric data produced for navigating a spacecraft. Measuring the frequency of a received carrier and comparing it with a predicted or expected value produces “Doppler data.” If the transmitter frequency is perfectly stable, the Doppler effect causes the received frequency to change by an amount that is proportional to the line-of-sight velocity between the transmitter and receiver.

[2] MGS engineering telemetry is formatted in engineering transfer frames (ETF). An 8000-bit ETF is used for mission and engineering modes. It includes a 32-bit synchronization word, a 48-bit header, two 3952-bit XSU packets, and a 26-bit cyclic redundancy check (CRC) trailer. An 1120-bit ETF is used for the emergency modes. Non-ETF10000-bit science and engineering (S&E) data frames include Reed-Solomon symbols [3].

entered safe mode prior to initial acquisition. In safe mode, the first transmission would have been at 10 bps.

During the initial acquisition period, the spacecraft maintained its orientation with the +x-axis pointed directly at the Sun. About 2-1/2 hours after separation, with the solar arrays swept forward 30 deg above the y-axis in the direction of +x, the spacecraft began a “Sun-coning” roll rate of one revolution every 100 min about the +x-axis. The spacecraft continued to hold this attitude for a total of 2 hr, starting from the time that LGA began transmitting.

On the ground, initial downlink acquisition was accomplished in a few minutes through the acquisition aid antenna at the Canberra site, which then controlled the initial pointing of the 34-m HEF station, DSS-45. Initial uplink-acquisition was delayed, in part because the LGA was blocked for about 45 min of each 100-min rotation.

6.5 Cruise

The cruise phase was the 10-month period of ballistic flight from Earth to Mars. The cruise phase was divided into inner-cruise and outer-cruise subphases.

6.5.1 Inner Cruise

Inner cruise was between the end of the initial acquisition phase and the first use of the HGA, and began after the first 60 days of cruise. Initial deployment and checkout of the spacecraft and its payload were accomplished. Also two-way Doppler and ranging data were taken to determine the flight path for the purpose of planning and executing the first of four planned trajectory-correction maneuvers (TCM).

In inner cruise, communication with Earth was through the LGAs, primarily due to spacecraft configuration and the solar-array geometry. Because the HGA sits on the spacecraft in a stowed, body-fixed orientation during cruise, communication with Earth through the HGA would require achieving a spacecraft attitude to point the antenna directly at Earth. However, orienting the spacecraft to the Earth-pointed attitude would have made the sunlight’s angle of incidence on the solar arrays too large to generate the minimum power required for this mission phase.

The spacecraft spins about its +x-axis at a one-rotation-per-100-min rate, at an angle of 60 deg from the Sun in Earth’s direction.

6.5.2 Outer Cruise

Outer cruise began in January 1997, when the spacecraft switched from use of the LGA to the HGA for communication with Earth. This time was established by the end of a geometrical constraint involving simultaneous pointing of the HGA to Earth, and the solar array sufficiently toward the Sun.

Outer cruise was a quiet period, involving routine spacecraft monitoring, navigation data collection, and executing the three remaining trajectory-correction maneuvers. The HGA’s being Earth-pointed was seized as an opportunity to return science data. At the start of the outer-cruise phase, the Earth-spacecraft range increased, making possible a 85.33 kbps downlink rate, but by the end the rate had dropped to 21.3 kbps. Due to staffing constraints, the team

sequenced the spacecraft to perform only limited amounts of instrument calibration and science collection.

Excluding trajectory-correction maneuvers, normal spacecraft configuration was outer-cruise array normal spin (ANS) to take advantage of the decreasing Earth and Sun angles. In this mode, the spacecraft was oriented with the +x-axis pointed directly at Earth, and spinning at 0.01 revolutions per minute (rpm). Spacecraft-solar arrays were swept forward 30 deg above the y-axis, in the +x direction.

6.6 Mars Orbit Insertion

The Mars orbit insertion (MOI) phase in mid-September 1997 began with a main-engine burn. This slowed MGS by approximately 980 m/s, permitting it to assume a highly elliptical, 48-hr orbit.

Spacecraft maneuvering during MOI precluded use of the HGA to communicate with Earth. The strategy was to slew the spacecraft at a constant rate to keep the thrust nearly tangent to the trajectory arc. Main-engine burn was planned for a minimum of 20 min, starting about 10 min before periapsis. Final MOI-burn-sequence phase began with the start of 2-kbps, engineering-telemetry recording on two of the recorders. Immediately after the completion of the burn, the spacecraft began the slew back to ANS Earth-point configuration. The MOI mission phase ended with re-establishing HGA communications and transmitting 2 kbps real-time engineering data to Earth.

6.7 Aerobraking

Aerobraking is the accurately controlled passage of the spacecraft through Mars' upper atmosphere to change its orbit velocity and shape. MGS required aerobraking to make up a delta-V deficit of nearly 1250 m/s in order to lower the initial, highly-elliptical capture orbit down to mapping orbit altitudes [8]. The spacecraft traversed Mars atmosphere's upper fringes each time it made a periapsis passage, thereby losing a little momentum and altitude with each successive apoapsis pass.

Accurate aerobraking required precise navigation as afforded by the telecom links [9]. Orbit determination was performed every orbit by analysis, primarily of two-way, coherent Doppler data and on occasion, one-way Doppler data.[3] The data-acquisition strategy was to acquire a little over one orbit of Doppler measurements extending 2 to 5 hr past periapsis-passage. Because of spacecraft attitude during the atmospheric traverse and the geocentric occultation, no tracking data could be acquired within approximately one hour, centered on periapsis-passage. Ranging data was acquired occasionally, but for Mars-ephemeris refinement purposes rather than to determine orbit. In a representative analysis [9], the X-band Doppler was sampled

[3] The transmitter carrier frequency for two-way Doppler originates with the hydrogen maser reference at the station. The frequency for one-way Doppler originates in the spacecraft USO. The USO is much less stable than the hydrogen maser. The two-way Doppler data is preferred for orbit determination, but it requires an uplink to be in lock at the spacecraft.

at 60-s intervals. Post-fit Doppler residuals generally have a standard deviation of 2.9 mHz (referenced to X-band) or 0.051 mm/s in range-rate.

The project took a 3-wk aerobraking hiatus in October 1997 to evaluate continuing the aerobraking in the face of newly discovered damage to one of the two solar arrays. Aerobraking phase details were re-designed to minimize pressures on the array. The mission consequence was a delay in the start of the next phase, Mapping.

6.8 Mapping

The mapping phase was the period of most concentrated return of science data from orbit. Before the delay in aerobraking, mapping was scheduled for March 15, 1998 through January 31, 2000, a span of one Martian year (687 Earth days). After over a year's delay, mapping began April 1, 1999. Primary-mission mapping successfully concluded January 31, 2001.

During this phase, the spacecraft kept its science instruments (+z-axis panel of the spacecraft) nadir-pointed to enable data recording on a continuous basis. On a daily basis, the spacecraft transmitted 24 hr of recorded data back to Earth during a single 10-hr tracking pass. The HGA gimbal allowed data recording to proceed while the downlink to Earth was in progress. Limited range of motion in one gimbal axis required occasional spacecraft-attitude maneuvers. The spacecraft-attitude sketch in Section 3 includes the mapping mode.

Playback of data recorded on the solid-state recorders used downlink rates of 21.3, 42.7, and 85.3 (corresponding to record rates of 4.0, 8.0, and 16.0 kbps, respectively). The downlink strategy sequenced the single highest rate supportable for the entire station pass.

6.9 Solar Conjunction

Solar conjunction is that period of a mission when the spacecraft and the Sun are in the same angular region as viewed from the deep-space station. The angular separation is the Sun-Earth-probe (SEP) angle. Effects on deep-space communication become more severe as the SEP angle becomes smaller. Degradation to an X-band uplink and downlink can begin to occur inside of 3 deg, and inability to communicate at times inside of 2 deg. MGS defined solar conjunction as the periods the SEP was 2 deg or smaller. Typical telecom strategy is to maintain the spacecraft in a mode requiring neither commanding nor telemetry. During conjunction, the spacecraft remains in mapping-mode attitude (HGA to Earth) and no communication is required.

The first MGS solar conjunction was May 4–May 21, 1998. The second was June 21–July 12, 2000, with a third (in the extended mission) planned for August 2–August 17, 2002. In the most recent conjunction, the minimum SEP angle was 0.9 deg [10]. No telemetry was received June 29–July 1.

The conjunction plan had the spacecraft attempt to contact Earth during three of each day's twelve orbits. When the downlink signal is good, the project receives engineering telemetry, and the actual Mars equator crossing time for that orbit (from Doppler analysis). Comparing predicted and actual equator-crossing times determines orbit-trim maneuver accuracy.

6.10 Mars Relay

During this phase, the spacecraft is intended to function as a relay satellite for various vehicles on the surface or in the atmosphere of Mars, in support of the Mars Surveyor Program.

At the time MGS was designed, NASA planned to launch two spacecraft to Mars every alignment opportunity (approximately every two years). To provide data-communication capabilities between several of the landed systems to be placed on the surface of Mars and the spacecraft in orbit, many of the orbiters were expected to carry UHF radio relays. MGS has the first such system, called the Mars Relay. Data from the onboard UHF receiver is stored in a buffer in the Mars Orbiter Camera (MOC), for subsequent readout via the MGS X-band downlink. The system also includes a UHF transmitter that that outputs 1.3 W, at 437.1 MHz [2], and is intended to communicate commands to vehicles on the surface.

During the inner-cruise phase (about one month after launch), MGS performed a near-Earth test of the Mars Relay. The test involved transmission of a UHF signal (401.5 MHz) from a ground station on Earth to the spacecraft. More recently, a 46-m antenna at Stanford University in California successfully detected the 1-W MGS Mars Relay Beacon from Mars during a system test November 3–4, 1999.

The most recent Mars Relay receive attempt was in support of the search for Mars Polar Lander in December 1999 and January 2000, The Lander was commanded to transmit at UHF to the MGS Mars Relay receiver. MGS detected no signal.

6.11 Safe-Mode Operation

Safe mode is intended to ensure a commandable spacecraft in the event:

- Critical failures are not handled by the redundancy-management operations,
- Health-monitoring fails predetermined checks, or
- Ground commands the spacecraft to enter safe mode

In safe mode, the spacecraft aligns itself on a predefined, body-fixed vector to the Sun line, and rotates at 0.01 rpm. This setup ensures an attitude that will accommodate an LGA downlink, whatever the mission's current phase.

General uplink safe-mode configuration selects LGA-receive-1—boresighted with the spacecraft +x-axis—and a 7.8125 bps command rate.

General safe-mode configuration is for downlink through the low-gain antenna, unless ground command overrides it. Safe-mode telemetry is at 10 bps with a modulation index of 42.3 deg. The telemetry contains the emergency ENG data packet (1120 bits), and is encoded only with the (7,1/2) convolutional code (no Reed-Solomon coding). The ranging channel is off.

If safe-mode entry occurred during launch or inner-cruise phases, the spacecraft would orient so that its +x-axis points 60 deg from the Sun and rotates around that Sun line at 0.01 rpm. This attitude was chosen to orient the solar arrays optimally for the inner cruise phase. During its 100-min period, the LGA-1 off-point angle to the ground station would vary due to its coning motion.

During outer cruise, safe mode would point the +x-axis at the Sun. Both downlink and uplink communication would be through LGAs. During aerobraking, safe-mode attitude was +x-axis, oriented 15 deg away from the Sun. Telecom required downlink to Earth at 10 bps for a minimum of 15 min out of each 100-min spin period. Mapping safe mode may downlink via the HGA. In this mapping safe mode, the spacecraft's +x-axis is oriented, toward the Sun, and the HGA gimbal points the HGA to Earth.

6.12 Spacecraft Configurations and Pointing Attitude

Depending on mission phase, Mars Global Surveyor uses several operational configurations. Each is a unique mix of solar array, high-gain-antenna and attitude settings, picked to optimally balance power, thermal, and communication constraints. The configurations include:

- Launch
- Array-normal spin
- Maneuver
- Aerobraking (drag pass)
- Mapping/relay

Each configuration and its associated-spacecraft attitude are listed in Table 6-1.

Table 6-1. Spacecraft configurations and corresponding attitudes.

Mission Phase	Normal Configuration Mode	Spacecraft Attitude
Launch	Launch	z-axis pointed along spacecraft longitudinal axis, +z pointed toward top of rocket
Inner Cruise	Array Normal Spin (ANS)	+x-axis pointed 60 deg off Sun, slow roll about the +x-axis
Outer Cruise	Array Normal Spin (ANS)	+x-axis pointed directly at Earth, slow roll about +x
TCMs and MOI	Maneuver	z-axis aligned along inertial direction of thrust vector, +z in the direction of the desired velocity
MOI to Mapping	Array Normal Spin (ANS)	+x-axis pointed directly at Earth, slow roll about the +x-axis
Aerobraking	Aerobraking	-z-axis forward along velocity vector, +x nadir pointed
Mapping	Mapping	+x-axis forward along velocity vector, +z nadir pointed
Mars Relay	Mapping	+x-axis forward along velocity vector, +z nadir pointed

References

[1] C. Chen, *MGS Telecom System Operations Reference Handbook*, JPL 542-257 (internal document), Jet Propulsion Laboratory, Pasadena, California, September 12, 1996.

[2] MGS website, http://mars.jpl.nasa.gov/mgs/ Accessed May 2001.

[3] MGS *Telemetry Dictionary*, http://mars.jpl.nasa.gov/mgs/pdf/pdf-mgs.html (the X-band telecommunications system functional block diagram is on page 12) Accessed May 2001.

[4] D. Morabito, S. Butman, and S. Shambayati, "The Mars Global Surveyor Ka-Band Link Experiment (MGS/KaBLE-II)," *Telecommunications and Mission Operations Progress Report 42-137*, May 15, 1999, http://tmo.jpl.nasa.gov/tmo/progress_report/issues.html Accessed May 2001.

[5] *DSMS Telecommunications Link Design Handbook*, JPL 810-005, Rev. E, http://eis.jpl.nasa.gov/deepspace/dsndocs/810-005/810-005.html Accessed May 2001.

[6] *Deep Space Telecommunications Systems Engineering*, (Joseph H. Yuen, editor) New York: Plenum Press, 1983.

[7] K. K. Tong and R. H. Tung, "A Multi-Mission Deep Space Telecommunications Analysis Tool: the Telecom Forecaster Predictor," *Telecommunications and Data Acquisition Progress Report 42-140*, http://tmo.jpl.nasa.gov/tmo/progress_report/issues.html Accessed May 2001.

[8] M. D. Johnston, P. B. Esposito, V. Alwar, S. W. Demcak, E. J. Graat, R. A. Mase, "Mars Global Surveyor Aerobraking at Mars," AAS 98-112, AAS/AIAA Space Flight Mechanics Meeting, Monterey, California, February 9–11, 1998.

[9] P. Esposito, V. Alwar, S. Demcak, E. Graat, M. Johnston and R. Mase, "Mars Global Surveyor Navigation and Aerobraking at Mars," AAS 98-384, 13th International Conference on Space Flight Dynamics, Goddard Space Flight Center, Greenbelt, Maryland, May 10, 1998.

[10] D. Morabito, S. Shambayati, S. Finley, D. Fort, J. Taylor, and K. Moyd, "Ka-band and X-band Observations of the Solar Corona Acquired During Superior Conjunctions Using Interplanetary Spacecraft," [Abstract] Seventh Ka-band Utilization Conference, Genoa, Italy, September 26–28, 2001.

Resources

[1] News releases about several spacecraft, including MGS. http://www.jpl.nasa.gov/news/news_index.html Accessed May 2001.

[2] The MGS home page. Includes archives of project documentation. http://mars.jpl.nasa.gov/mgs/index.html Accessed May 2001.

[3] The Mars Pathfinder home page. Has sections representing the status of MGS at the landing in 1997 and at the end of mission. http://mars.jpl.nasa.gov/default.html Accessed May 2001.

[4] The Mars Odyssey (Mars ’01) home page. http://mars.jpl.nasa.gov/odyssey/ Accessed May 2001.

[5] Telecommunications and Mission Operations Progress Report articles on Mars spacecraft-related topics (by date). http://tmo.jpl.nasa.gov/tmo/progress_report/article_index.html. Accessed May 2001.

- D. Morabito, S. Shambayati, S. Butman, D. Fort, and S. Finley, “The 1998 Mars Global Surveyor Solar Corona Experiment,” PR 42-142.
- L. Harcke and G. Wood, “Laboratory and Flight Performance of the Mars Pathfinder (15,1/6) Convolutionally Encoded Telemetry Link,” PR 42-129.
- G. E. Wood, S. W. Asmar, T. A. Rebold, and R. A. Lee, “Mars Pathfinder Entry, Descent, and Landing Communications,” PR 42-131.
- R. D. Kahn, S. Thurman, and C. Edwards, “Spacecraft-Spacecraft Radio-Metric Tracking: Signal Acquisition Requirements and Application to Mars Approach Navigation,” PR 42-117.
- P. M. Kroger, J. S. Border, and S. Nandi, “The Mars Observer Differential One-Way Range Demonstration,” PR 42-117.
- T. A. Rebold, A. Kwok, G. E. Wood, and S. Butman, “The Mars Observer Ka-Band Link Experiment,” PR 42-117.
- J. A. Estefan and S. W. Thurman, “Precision X-band Radio Doppler and Ranging Navigation: Mars Observer Interplanetary Cruise Scenario,” PR 42-111.
- S. W. Thurman, “Navigation and Guidance for a Mars Aerocapture Mission: A System Design Challenge,” PR 42-103.

Abbreviations and Acronyms

ACE	call sign for project real-time mission controller
AGC	automatic gain control (received carrier power)
ANS	array normal spin
ant pnt	antenna pointing
assy	assembly
aux osc	auxiliary oscillator
BER	bit error rate
bps	bits per second
BW	bandwidth
BWG	beam waveguide
CD	cumulative distribution
C&DH	command and data handling [subsystem]
CDU	command-detector unit
CIU	controls interface unit
Clk	clock
cmd	command
CNR	carrier-to-noise ratio
Cplr	coupler
CRC	cyclic redundancy check
dB	decibel
dBi	decibels relative to gain of isotropic antenna
DC	direct current
DCT	design control table
DL	downlink
Dn Conv	down converter
DOFF	degrees off (boresight)
Doppler	carrier frequency change from transmitter-receiver velocity
DOR	differential one-way ranging
DOY	day of year
Drv	drive
DSMS	Deep Space Mission Systems
DSN	Deep Space Network
Eb/No	bit-energy-to-noise spectral density ratio

EDF	engineering data formatter
EIRP	effective isotropic radiated power
ENG	engineering format
ERT	Earth receive time
Es/No	energy per telemetry signal, over noise-spectral density
ETF	engineering transfer frame
ETX	exciter transmitter
HEF	high efficiency
EM	equipment module
fl	reference frequency in transponder (about 9.5 MHz)
G	acceleration equal to Earth's gravity
GDE	gimbal-drive electronics
G/T	ratio of antenna gain to system-noise temperature
HGA	high-gain antenna
ICBM	intercontinental ballistic missile
INISD	Interplanetary Network and Information Systems Directorate (formerly Telecommunications and Mission Operations Directorate)
JPL	Jet Propulsion Laboratory
KaBLE	Ka-band Link Experiment
LNA	low-noise amplifier
LGA	low-gain antenna
LGA-Tx	transmitting LGA
LGA-Rx	receiving LGA
LGR	low-gain receive (antenna)
LGT	low-gain transmit (antenna)
LMA	Lockheed Martin Astronautics
LNA	low-noise amplifier
m	meter
MGS	Mars Global Surveyor
MOC	Mars Orbiter Camera
MOI	Mars orbit insertion
MOT	Mars Observer Transponder
m/s	meters per second
mult	multiplier
NASA	National Aeronautics and Space Administration
NED	nadir equipment deck
No	noise-spectral density
NOCC RT	Network Operations Control Center Real-Time

NRZ	Nonreturn to zero
NRZ-L	Nonreturn to zero level
osc	oscillator
OWLT	one-way light time
Pc/No	carrier power to noise-spectral density ratio
Pd/No	data power to noise-spectral density ratio
PDS	payload data system
PLL	phase-lock loop
Pr/No	ranging power to noise-spectral density ratio
Pt/No	total power to noise-spectral density ratio
pwr	power
Radome	plastic housing for radar antenna
RF	radio frequency
RHCP	right-hand circular polarization
rms	root mean square
rpm	revolutions per minute
RngMod	ranging modulation (abbreviation in the DCTs)
RTLT	round-trip light time
Rx	receiver
S&E	science and engineering format
s/c	spacecraft
SEP	Sun-Earth-probe angle
SEU	single-event upset
sigma	(one) standard deviation
SNT	system noise temperature
SPE	static phase error
sps	symbols per second
SSPA	solid-state power amplifier
SSR	solid-state recorder
TCM	trajectory correction maneuver
TFP	telecom predictor forecaster
tlm	telemetry
TMOD	Telecommunications and Mission Operations Directorate (name has changed to InterPlanetary Network and Information Systems Directorate—INISD)
TWNC	two-way noncoherent
TWTA	traveling-wave-tube amplifier
tx	transmitter
UHF	ultrahigh frequency

UL	uplink
UPC	up-converter
USO	ultrastable oscillator
UTC	universal time coordinated
vc	virtual command
VCO	voltage controlled oscillator
xfer	transfer (abbr)
XSU	cross-strap unit