# Cassini Orbiter/Huygens Probe Telecommunications

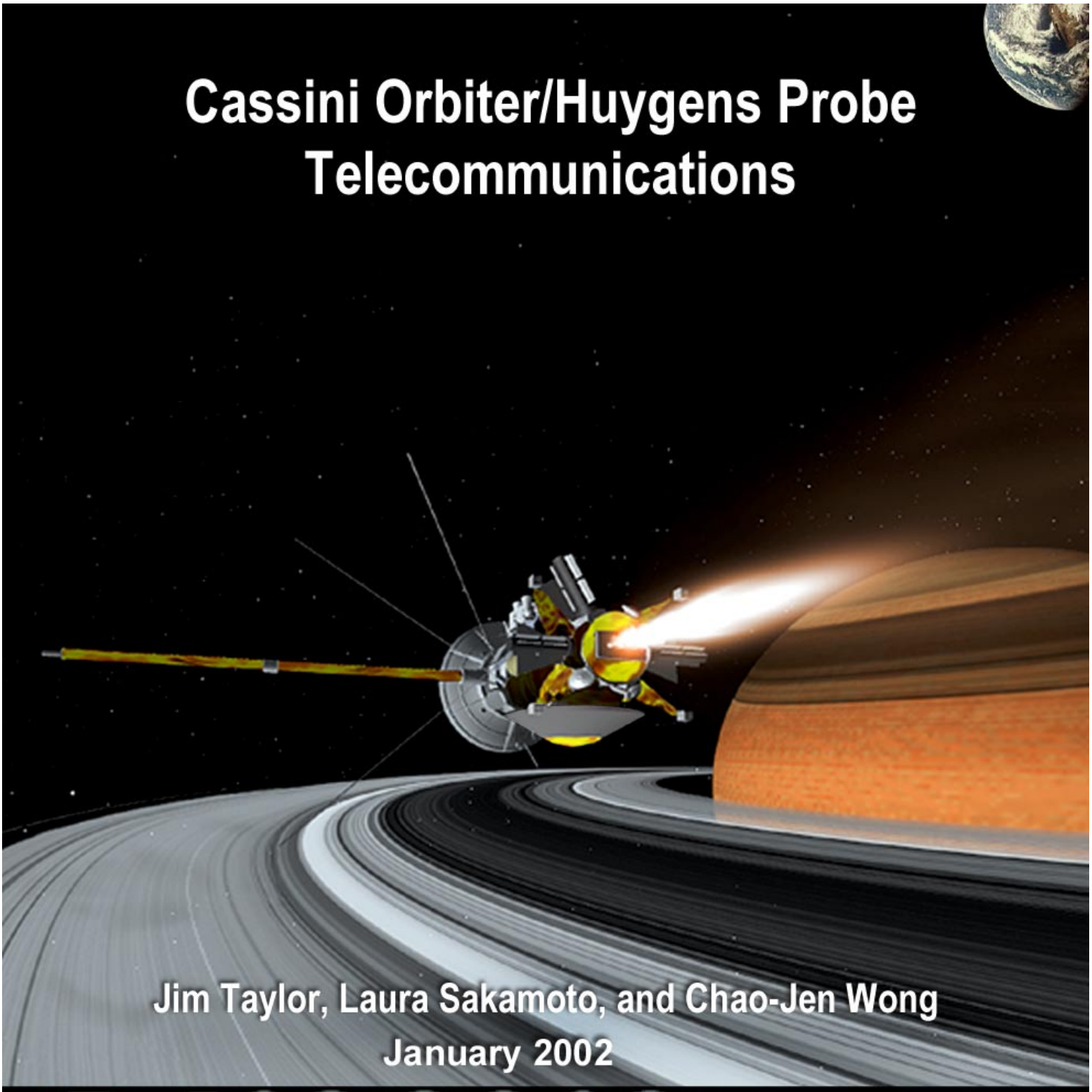

Jim Taylor, Laura Sakamoto, and Chao-Jen Wong

January 2002

JPL DESCANSO
Deep Space Communications and Navigation Systems
Center of Excellence
Design and Performance Summary Series

## DESCANSO Design and Performance Summary Series

## Article 3

# Cassini Orbiter/Huygens Probe Telecommunications

*Jim Taylor, Laura Sakamoto, and Chao-Jen Wong*
*Jet Propulsion Laboratory,*
*California Institute of Technology*
*Pasadena, California*

**National Aeronautics and**
**Space Administration**

**Jet Propulsion Laboratory**
**California Institute of Technology**
**Pasadena, California**

**January 2002**

This research was carried out at the
Jet Propulsion Laboratory, California Institute of Technology,
under a contract with the
National Aeronautics and Space Administration.

**Cassini: Deep Space Mission to Saturn**

The cover is a computer-rendered image of the Cassini Orbiter and Huygens Probe during the Saturn Orbit Insertion maneuver in 2004, just after the main engine has begun firing. The 4-m-diameter high-gain antenna for communications with Earth is mounted on the opposite side of the orbiter from the main engine. The 2.7-m-diameter conical-shaped probe, to be released from the orbiter some months after the orbit insertion, is shown with its tip toward Saturn's ring plane in this picture.

This article was originally published on the website, DESCANSO: Deep Space Communications and Systems Navigation, http://descanso.jpl.nasa.gov/index_ext.html

## DESCANSO DESIGN AND PERFORMANCE SUMMARY SERIES

Issued by the Deep-Space Communications and Navigation Systems
Center of Excellence
Jet Propulsion Laboratory
California Institute of Technology

Joseph H. Yuen, Editor-in-Chief

### Previously Published Articles in This Series

*Article 1*—"Mars Global Surveyor Telecommunications"
Jim Taylor, Kar-Ming Cheung, and Chao-Jen Wong

*Article 2*—"Deep Space 1 Telecommunications"
Jim Taylor, Michela Muñoz Fernández, Ana I. Bolea Alamañac and Kar-Ming Cheung

# Table of Contents

*Foreword* ..... ix
*Preface* ..... x
*Acknowledgments* ..... x

Section 1 Mission Description ..... 1

Section 2 Telecom System Requirements and Constraints ..... 3
2.1 Command Requirements ..... 4
2.2 Telemetry Requirements ..... 4
2.3 Navigation Requirements ..... 5
2.4 Fault Protection Requirements ..... 5
2.5 Huygens Relay Link ..... 5

Section 3 Telecom System Design ..... 6
3.1 Orbiter Antennas ..... 7
3.2 Orbiter Radio Frequency Subsystem ..... 9
3.3 Radio Frequency Instrument Subsystem ..... 14
3.4 Huygens Probe/Cassini Orbiter Relay Link ..... 16
3.5 Telecom System Mass and Input Power ..... 17

Section 4 Ground System ..... 19
4.1 Background ..... 19
4.2 The 34-Meter High-Efficiency Station ..... 20
4.3 The 70-Meter Station ..... 21
4.4 Carrier Tracking ..... 21
4.5 Command ..... 23
4.6 Telemetry ..... 23
4.7 Ranging ..... 24
4.8 Radio Science ..... 26
4.9 DSN Upgrades Specifically for Cassini ..... 26

Section 5 Telecom Link Performance ..... 28
5.1 Inner Cruise (Low-Gain Antenna) ..... 28
5.2 Outer Cruise and Saturn Orbit (High-Gain Antenna) ..... 29

Section 6 Operational Scenarios ..... 55
6.1 DSN Coverage and General Configuration ..... 55

6.2 Launch ..... 55
6.3 Inner Cruise-LGA Only ..... 56
6.4 Outer Cruise and Space Science–HGA ..... 57
6.5 Saturn Arrival and Tour ..... 58
6.6 Safing ..... 60

Section 7 Lessons Learned ..... 62

References ..... 64
Abbreviations and Acronyms ..... 66

# List of Figures

Fig. 3-1. Diagram of Cassini telecom system elements. ..... 6
Fig. 3-2. Antenna functional block diagram. ..... 7
Fig. 3-3. Cassini high-gain antenna. ..... 9
Fig. 3-4. RFS functional block diagram. ..... 10
Fig. 3-5. RFIS functional block diagram. ..... 15
Fig. 4-1. Functional diagram of 34-m HEF transmitter and microwave subsystem. ..... 20
Fig. 4-2. Measurement of coherent two-way (or three-way) Doppler. ..... 22
Fig. 4-3. Production of telemetry symbols for decoding. ..... 24
Fig. 4-4. Ranging architecture in the NSP era. ..... 25
Fig. 4-5. DSN radio-science receiving system configuration diagram. ..... 27
Fig. 5-1. LGA1 X-band uplink from 34-m HEF station (May 1998–February 2000). .. 33
Fig. 5-2. LGA2 X-band uplink from 34-m HEF station (May 1998–February 2000). .. 34
Fig. 5-3. LGA1 X-band downlink to 34-m DSS (May 1998–February 2000). ..... 38
Fig. 5-4. LGA2 X-band downlink to 34-m DSS (May 1998–February 2000). ..... 39
Fig. 5-5. LGA1 X-band ranging, 34-m HEF UL and DL (May 1998–February 2000). 42
Fig. 5-6. LGA2 X-band ranging, 34-m HEF UL and DL (May 1998–February 2000). 43
Fig. 5-7. HGA X-band uplink with 34-m HEF station (February 2000–July 2008). .... 47
Fig. 5-8. HGA X-band downlink to 34-m HEF station (February 2000–July 2008). ... 51
Fig. 5-9. HGA X-band ranging with 34-m HEF station (February 2000–July 2008). .. 54

# List of Tables

Table 3-1. Summary of key antenna subsystem parameters. ..... 8
Table 3-2. RFS states allowed by TCU. ..... 14
Table 3-3. Cassini Orbiter telecom system power and mass summary. ..... 18
Table 5-1. Uplink DCT (34-m HEF, LGA2 sunshielded, 05/05/1998). ..... 30
Table 5-2. Downlink DCT (34-m HEF, LGA2 sunshielded, 05/05/1998). ..... 35
Table 5-3. Ranging DCT (34-m HEF, LGA2 sunshielded, 05/05/1998). ..... 40
Table 5-4. Uplink DCT (34-m HEF, HGA, 07/01/2004). ..... 44
Table 5-5. Downlink DCT (34-m HEF, HGA, 07/01/2004). ..... 48
Table 5-6. Ranging DCT (34-m HEF, HGA, 07/01/2004). ..... 52

# Foreword

This Design and Performance Summary Series, issued by the Deep Space Communications and Navigation Systems Center of Excellence (DESCANSO), is a companion series to the DESCANSO Monograph Series. Authored by experienced scientists and engineers who participated in and contributed to deep-space missions, each article in this series summarizes the design and performance for major systems such as communications and navigation, for each mission. In addition, the series illustrates the progression of system design from mission to mission. Lastly, it collectively provides readers with a broad overview of the mission systems described.

Joseph H. Yuen
DESCANSO Leader

# Preface

This article primarily describes data transmission and reception between the Cassini Orbiter spacecraft and the Deep Space Network (DSN) ground systems, for communications, radio science, and navigation. The article also includes some information on the one-way link from the Huygens Probe to the Cassini Orbiter during Probe descent to Titan, and the Radar science instrument that uses the communications antenna.

The main goal of this article is to provide a reasonably complete single source from which to look up specifics of the Cassini radio communications. The description is at a functional level, intended to illuminate the unique mission requirements for Cassini and Huygens, and the constraints that led to the design of the communications system and how it has been operated in flight.

The article describes the Cassini mission telecommunications through December 2001. The article will be updated as the mission continues.

Much of the telecom design information in this article comes from the Cassini Design Control Document, written by Andre Makovsky [1]. Some mission and operational information comes from the Cassini Project external Website [2] at the Jet Propulsion Laboratory (JPL). Most numerical quantities are from the project's functional requirements [3]. JPL telecommunications people involved with Cassini design and flight at JPL have reviewed the article.

# Acknowledgments

The authors would like to express their appreciation to Gael Squibb for his encouragement and the support of the Telecommunications and Mission Operation Directorate[1] during the preparation of this article. The authors are especially grateful to Andre Makovsky, David Doody, Randy Herrera, and other current and former Cassini team members for their advice, suggestions, and helpful information.

[1] Now the InterPlanetary Network and Information Systems Directorate (IPN-ISD)

## Section 1

# Mission Description

**Note**: Throughout this article, the term "Cassini" refers to the combined orbiter/probe up to the time of their separation, and to the orbiter thereafter. The term "probe" refers to the Huygens Probe that enters the atmosphere of Titan.

With an October 15, 1997 launch, the two-story-tall Cassini spacecraft began a long, multi-year journey to reach and explore the exciting realm of Saturn, the most distant planet that can easily be seen by the unaided human eye [4]. Saturn itself has an interesting interior and atmosphere. In addition, the rest of the Saturnian system is vast and varied, including

- The most spectacular of the four planetary ring systems in this solar system,
- Numerous icy satellites with a variety of unique surface features,
- A huge magnetosphere teeming with particles that interact with the rings, and
- Titan, one of the solar system's most intriguing moons.

Titan is slightly larger than the planet Mercury, and has a hazy, hydrocarbon-rich atmosphere that is denser than Earth's.

The Cassini/Huygens mission is an international venture involving the National Aeronautics and Space Administration (NASA*), the European Space Agency (ESA), the Italian Space Agency (ASI), and several separate European academic and industrial partners [4]. The mission is managed for NASA by JPL. The large spacecraft consists of the NASA's Cassini Orbiter and ESA's Huygens Titan probe. The spacecraft carries a sophisticated complement of science instruments, including 12 on the orbiter and 6 in the Huygens probe, to delve into the mysteries of Saturn's system. The orbiter mass at separation from the Centaur upper stage was nearly 5574 kg, over half of which was propellant for trajectory control. The mass of the Titan probe (2.7 m diameter) is roughly 350 kg. The total duration of the prime mission is nearly 11 years

*Look up this and other abbreviations and acronyms in the list that begins on page 66.

including the flight time to Saturn and the four-year orbital tour of the planet, its rings, satellites, and magnetospheres.

The benefits derived from the mission are significant. Among the rewards of the international cooperation is the excitement of discoveries already made in transit to Saturn and those yet to come. The spacecraft's new technologies include powerful new computer chips, solid-state recorders, gyroscopes with no moving parts, and solid-state power switches As Cassini transmits its findings from Saturn during the 2004 to 2008 period, the results are bound to inspire young and old alike to learn more about science and contemplate issues ranging from the origin of the solar system to the beginning of life on Earth.

The mission (elaborated in Section 6, **operational scenarios**) consists of seven phases:

- Launch and initial acquisition — October 15, 1997
- Inner cruise — began October 20, 1997 (USO on)
- Outer cruise — began February 1, 2000 (HGA pointing constraint lifted)
- Science cruise — begins July 2, 2002
- SOI and initial orbit — begins July 1, 2004
- Probe release — November 27, 2004
- Saturn tour — continues to end of prime mission June 30, 2008.

The 7-year journey to Saturn required two gravity assists from Venus, one from the Earth, and one from Jupiter in its first 3 years. During inner cruise, spacecraft thermal design constrained the high-gain antenna (HGA) to point toward the sun so its main reflector could serve as a sunshade [5]. Uplink and downlink communications were via a low-gain antenna (LGA). Outer cruise, defined as beginning with the spacecraft 2.7 AU from the Sun, when this thermal constraint no longer applied, allowed communications to begin on the Earth-pointed HGA.

Radio science is conducting two solar conjunction experiments and three gravitational wave experiments (GWE) en route. The original mission plan did not include science data collection and return or high downlink data rates during inner or outer cruise until the science cruise phase, 2 years before reaching Saturn.

Science data taking will ramp up 6 months before Saturn Orbit Insertion (SOI) upon completion of the third GWE. Following SOI, the Huygens Probe will be released to follow a ballistic impact trajectory to Titan. It will collect and transmit science data back to the orbiter high gain antenna (HGA) during Titan atmospheric penetration.

The 4-year tour phase will consist of 74 orbits of Saturn ranging from 101 days down to 7 days in duration. During the tour, Cassini telecom is separated into high-activity periods, occurring about one fourth of every orbit and concentrated near targeted flybys and Saturn periapses, and low-activity periods the remaining three-fourths of the time. Tour science data return will require high downlink rates (14 to 166 kb/s). Even with the HGA, these rates will require use of either a 70-m station or an array of a 70-m with a 34-m station.

## Section 2

# Telecom System Requirements and Constraints

The traditional Cassini-DSN* telecom system has an uplink and downlink at X-band[1] that provide three functions: command, telemetry, and radiometric [6]. On Cassini, radiometric data includes two-way Doppler and two-way (turnaround) ranging. Doppler and ranging data are used together for radio navigation of the spacecraft and may also be used as ancillary data for radio science.

In addition, Cassini has several unique functions involving reception or transmission of radio frequency (RF) energy that impose requirements or constraints on the X-band telecom system. The HGA has separate feeds that allow it to

- Receive S-band[1] modulated carriers from the Huygens Probe (relay link)
- Transmit an S-band carrier for radio science (RF instrumentation subsystem)
- Transmit and receive Ka-band[1] carriers for radio science (RF instrumentation subsystem)
- Transmit Ku-band[1] radar signals and receive the backscattered echo (Radar subsystem)
- Receive natural Ku-band emissions for radiometry.

Other spacecraft functions (primarily thermal control, attitude control, and fault protection) impose constraints or requirements on the design and operation of the telecom system.

[1] The Cassini radio frequencies are detailed in Table 3-1. For Cassini, X-band refers to a carrier frequency of about 7.2 GHz (uplink) and 8.4 GHz (downlink). S-band is 2.1 GHz (Huygens relay) and 2.3 GHz (radio science), Ku-band is 13.8 GHz, and Ka-band is 34.3 GHz.

*Look up this and other abbreviations and acronyms in the list that begins on page 66.

## 2.1 Command Requirements

The telecom system receives and demodulates standard command waveforms transmitted from the DSN [7]. Cassini command rates are planned on the basis of a conservative criterion[2] to ensure a high probability that all commands will be received error-free.

The spacecraft is designed to be commandable throughout the mission, with 99% link reliability, via an LGA when Sun-pointed, and via either an LGA or the HGA when Earth-pointed. This requirement is met through selection of command rates and combinations of station transmitter power and command/ranging modulation index values.

The spacecraft is also required to be commandable, except during a few hours centered around Earth-flyby, in the presence of the uplink Doppler frequency shifts and the changing angles between Earth and the antenna boresights occurring during the planned mission trajectory.[3] The telecom system supports this requirement through bandwidths, station uplink carrier frequency control, and spacecraft antenna gain (beamwidth).

## 2.2 Telemetry Requirements

The telecom system generates and modulates the X-band downlink carrier, telemetry subcarriers, and coded telemetry symbol streams compatible with the DSN [7]. The Cassini downlink data rates for engineering and science telemetry are planned somewhat less conservatively[4] than those for the command uplink.

During the cruise mission phases, the telecom and fault protection system designs were required to provide safemode engineering telemetry via the LGA to a 70-m deep-space station (DSS) for spacecraft-Earth ranges of 2 AU or less.

During planetary operations (SOI through end of mission [EOM]), the telecom system and downlink will achieve the following data return, averaged over a 4-year period, with 95% confidence:

- With a 70-m station, 12-hour tracks, 4 gigabits/day
- With a 34-m high-efficiency (HEF) station, and 12-hour tracks, 1 gigabit/day.

[2] Cassini data rates are planned to include the effects of tolerances on spacecraft and station telecom parameter values. A command link requires that a positive margin exists even if performance is degraded by three standard deviations (3-sigma) below the predicted mean value. Further, the command link must have a positive margin for weather degradation modeled at the 99% level. The 99% weather criterion means that only 1% of the time will the weather effects at that site be more severe. See Section 5 for more detail.

[3] The carrier frequency received at the spacecraft is shifted by an amount proportional to the line-of-sight velocity between spacecraft and station. The station can compensate by altering its transmitted frequency if the velocity is relatively constant during a pass. The unwanted Doppler effect on the uplink is more severe in times of rapid velocity changes such as during planetary flybys and the Saturn orbit insertion.

[4] Taking into account the tolerances on spacecraft and ground link parameters, the telemetry link requires that a positive margin exists even if performance is degraded by two standard deviations (2-sigma) below the predicted mean value. The telemetry link must have a positive margin for weather degradation modeled at the 95% level.

## 2.3 Navigation Requirements

Navigation, the process of planning the spacecraft's trajectory and analyzing the accuracy of the trajectory achieved, uses radio and optical data types. The radio data includes two-way X-band Doppler and two-way ranging. Optical navigation is based on images of Saturn, its satellites and the background star fields, returned in telemetry. Image quality for optical navigation requires a bit error rate no greater than $10^{-5}$. Image taking begins 1 year before SOI and continues throughout the tour with up to eight images per day.

## 2.4 Fault Protection Requirements

Mission integrity requires there be no single credible fault resulting in permanent loss of a critical function during the mission [8]. Critical telecom functions are emergency command capability, normal command capability, two-way coherent carrier tracking, and the ability to transmit telemetry. This requirement is generally implemented in system design through the use of dual redundant receivers cross-strapped with dual redundant command detector units, and dual redundant X-band exciters cross-strapped with dual-redundant X-band RF power amplifiers.

There are two exceptions to this implementation:

- Each antenna (HGA, LGA1, LGA2) is unique
- The exciters and power amplifiers are cross-strapped with a single X-band hybrid.

Due to their passive nature and the use of good design practices, these elements are considered to be more reliable than the active elements that are protected by block redundancy.

Telecom imposes one constraint on spacecraft design and operations to achieve safemode commanding. During a mission phase where LGA2 is the antenna selected by fault protection for communications, the maximum roll rate about the z-axis is 0.1 deg per second, equivalent to one revolution per hour.

Rationale: This roll rate gives the DSN time to acquire the uplink and transmit a few commands at the lowest command rate, while the LGA2 pattern is sufficiently facing the Earth.

## 2.5 Huygens Relay Link

The relay-link design is constrained by the relative trajectories and orientation (pointing) of the orbiter and probe. The designs of the antenna subsystem (S-band feeds and antenna) and the on-board probe support avionics (PSA) are based on a reference probe entry/orbiter SOI mission design.

Specific assumptions were made in the following design areas [9,10].

- Gain/beamwidth of the HGA at the S-band relay frequencies.
- PSA noise figure and bandwidths.

## Section 3

# Telecom System Design

The Cassini onboard telecom system (Fig. 3-1) consists of three parts or subsystems.

- The **antenna subsystem** (ANT*), which provides the antennas and transmission lines from the interfaces with the radio frequency subsystem (RFS) and radio frequency instrument subsystem (RFIS) to the antennas
- The **RFS**, which performs command, telemetry, and radio metric communications at X-band

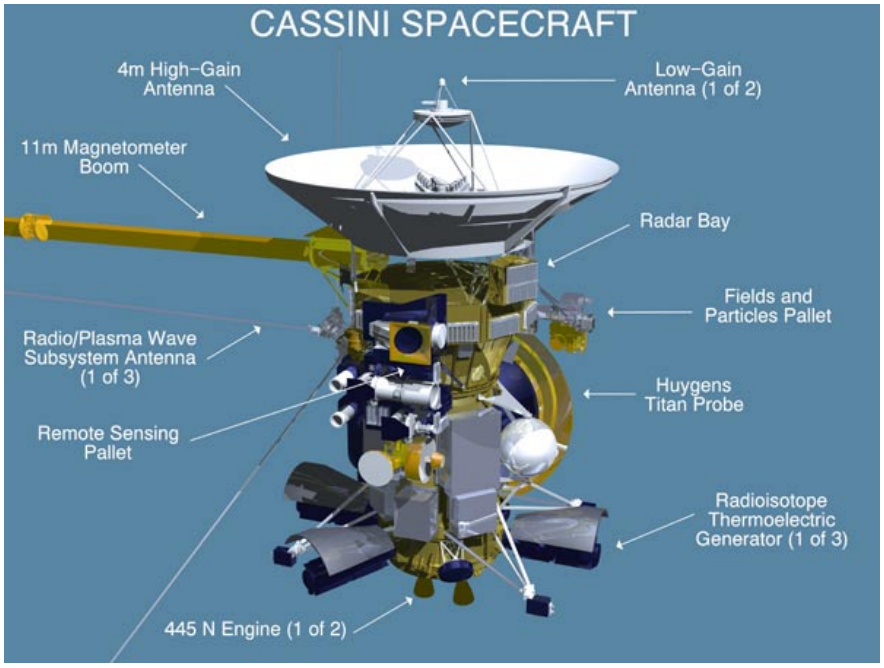


**Fig. 3-1. Diagram of Cassini telecom system elements.**

*Look up this and other abbreviations and acronyms in the list that begins on page 66.

- The **RFIS**, which contains hardware for radio science, using unmodulated S-band and Ka-band RF carriers.

## 3.1 Orbiter Antennas

The **ANT** includes a high-gain antenna (HGA) and two low-gain antennas (LGA1 and LGA2). See Fig. 3-2 for parts of the antenna and Table 3-1 for key antenna specifications.

The HGA is body-fixed with its boresight along the spacecraft –z-axis and is pointed by moving the spacecraft. In addition to the X-band communications functions, the HGA also provides feeds and reflector for

- S-band uplink signals for the Probe relay link
- S-band downlink signals for radio science
- Ka-band uplink and downlink signals for radio science
- Ku-band Cassini imaging radar subsystem (radar).

LGA1 and LGA2 operate at X-band only. LGA1 is mounted on top of the HGA. It has an unobstructed field of view of 112 deg (angle between the –z-axis and the edge of the HGA reflector). LGA2 is mounted on a boom below the Huygens Probe, pointed along the spacecraft –x-axis. Its field of view is limited to a maximum 120 deg (±60 deg from the –x axis).

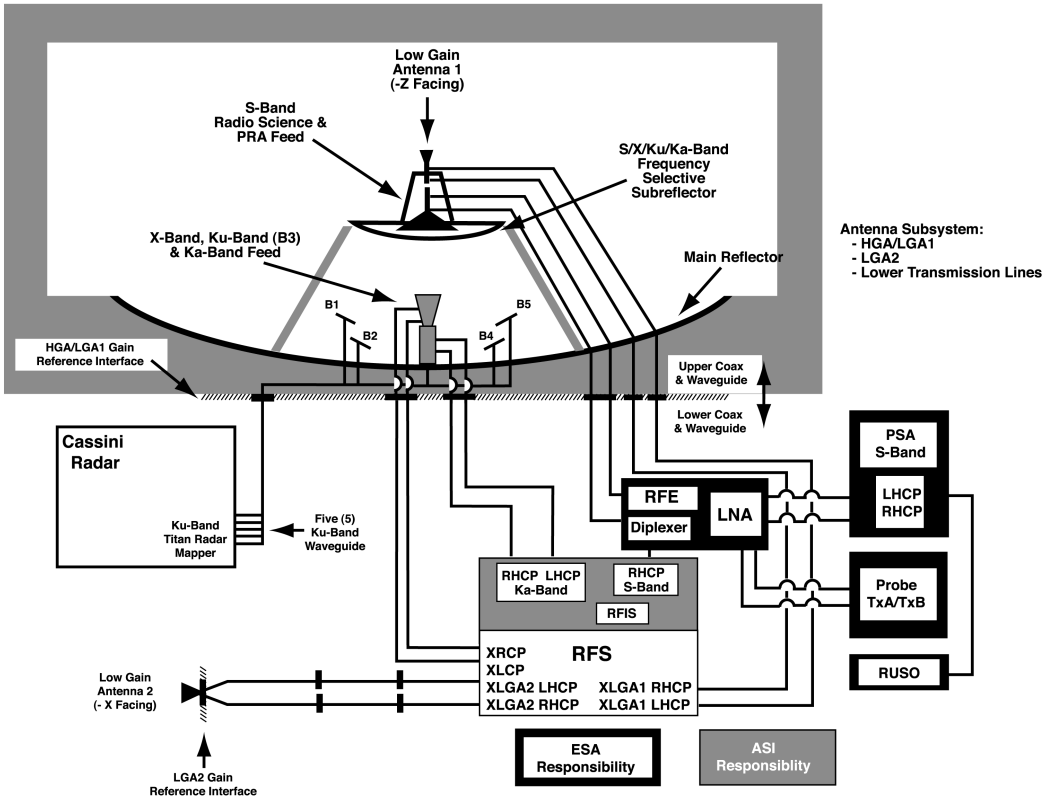


**Fig. 3-2. Antenna functional block diagram.**

**Table 3-1. Summary of key antenna subsystem parameters.**

| Primary Usage | Configuration | Frequency (MHz) | Gain (dB) | Polarization | Beamwidth (deg) |
|---|---|---|---|---|---|
| Command | LGA1 X-up | 7175 | 8.44 | RCP or LCP[a]* | ~32 |
| Telemetry | LGA1 X-down | 8425 | 8.94 | RCP or LCP* | ~24 |
| Command | LGA2 X-up | 7175 | 8.4 | RCP or LCP* | ~40 |
| Telemetry | LGA2 X-down | 8425 | 9.0 | RCP or LCP* | ~40 |
| Command | HGA X-up | 7175 | 44.7 | RCP or LCP* | 0.555 |
| Telemetry | HGA X-down | 8425 | 46.6 | RCP or LCP* | 0.635 |
| Probe relay | HGA S-up chain A | 2040 | 34.7 | LCP | 2.425 |
| Probe relay | HGA S-up chain B | 2098 | 35.3 | RCP | 2.280 |
| Radio Science | HGA S-down | 2298 | 35.8 | RCP | 2.125 |
| Radio Science | HGA Ka-up | 34316 | 54.1 | LCP | 0.164 |
| Radio Science | HGA Ka1& Ka2-down | 32028 | 56.4 | RCP | 0.167 |
| Radar | HGA Ku up & down | 13776.5 | 49.8[b] | Linear | N/A |

a. The X-band uplink polarization is LCP when deep space transponder A (DST-A) is selected and RCP when DST-B is selected. The X-band downlink polarization is LCP when traveling wave tube amplifier A (TWTA-A) is selected and RCP when TWTA-B is selected.

b. The radar has five beams; this gain value is for the center beam.

The Cassini HGA is a Cassegrain system, with a 4-m diameter parabolic primary reflector, a subreflector, and an X-band orthomode transducer in the feed. The feed can illuminate the reflectors with downlink signals of either or both polarizations, left circular (LCP) and right circular (RCP). The reflector focuses the uplink signal onto the subreflector, which in turn focuses it on the appropriate feed horn for reception. For the downlink (spacecraft-Earth) signal, the process works exactly in reverse, with signals emanating from the feed horns, then being refocused by the subreflector onto the primary reflector for transmission. The large primary reflector also serves as a sunshade for the rest of the spacecraft.

Refer to Fig. 3-3, the HGA picture on the next page. The Cassini HGA has X-, Ka-, and Ku-band feeds positioned at its apex. A subreflector that is reflective at these three bands is mounted above the primary reflector. An S-band feed horn is positioned behind the subreflector, near what would be the focal point of the primary reflector. Low-gain antenna number 1 (LGA1) is mounted directly atop the S-band feed.

The radar antenna consists of five Ku-band (13.8 GHz) feeds located at the Cassegrain portion of the HGA structure and the corresponding Ku-band waveguides [11]. By using the orbiter's motion and five Ku-band beams, the radar subsystem produces synthetic aperture images of solid and liquid Titan surfaces, determines topographic evaluations of Titan's surface via altimetry, and measures surface temperatures via microwave radiometry [7].

The **low-gain antennas (LGA1, LGA2)** sacrifice gain as compared with the HGA, but they provide relatively uniform coverage over a wide range of angles, except for areas shadowed by the spacecraft itself. LGAs are used when the HGA can't be pointed toward the Earth because of thermal constraints. LGAs have been used for relatively low data rates within relatively close spacecraft-Earth range (several AUs, for example).

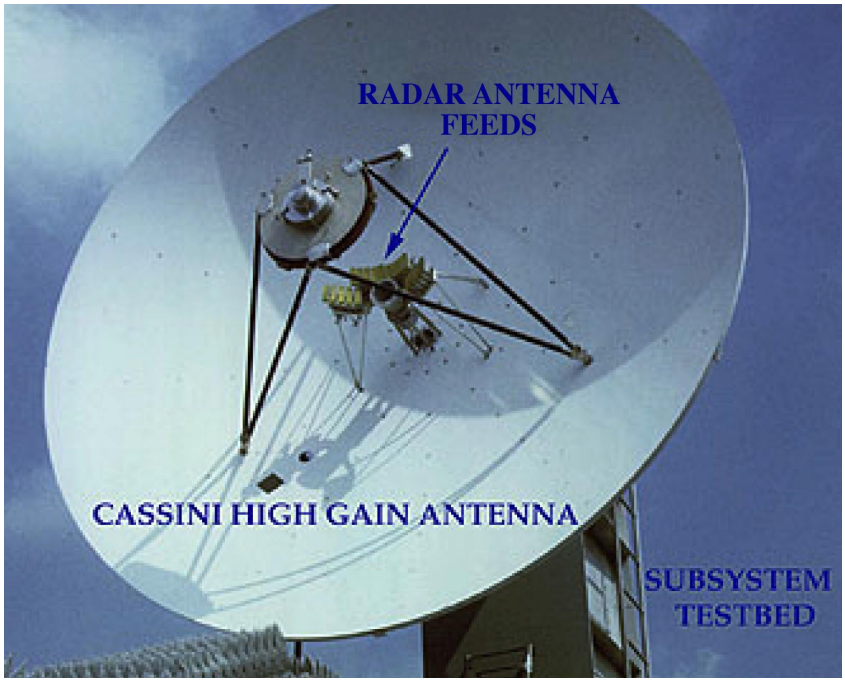


**Fig. 3-3. Cassini high-gain antenna.**

The primary LGA, LGA1, is mounted on the back of the HGA's subreflector and is bore-sighted on the –z-axis, the same direction as the HGA. The other LGA, LGA2, is mounted on a stub boom attached to the lower equipment module below the Huygens Probe and is bore-sighted along the –x-axis. LGA2 fills in important blind spots in LGA1's pattern. However, because LGA2 is close to the body of the spacecraft, its capability to receive or transmit in some directions is obstructed or interfered with by reflections from spacecraft surfaces.

Refer to the telemetry control unit (TCU) of the RFS for X-band antenna selection control (receiving and transmitting).

## 3.2 Orbiter Radio Frequency Subsystem

Refer to the following block diagram, Fig. 3-4. The RFS provides the Telecom system with X-band uplink carrier tracking, command detection, turnaround ranging demodulation, telemetry modulation, X-band downlink carrier generation, and downlink carrier amplification. RFS functional requirements are defined in [12].

The RFS consists of the following parts:

- Deep space transponders (DST) 2
  - X-band receiver
  - X-band exciter
  - Turnaround ranging channel
  - Differential one-way ranging (DOR) tone generator
- Command detector units (CDU) 2

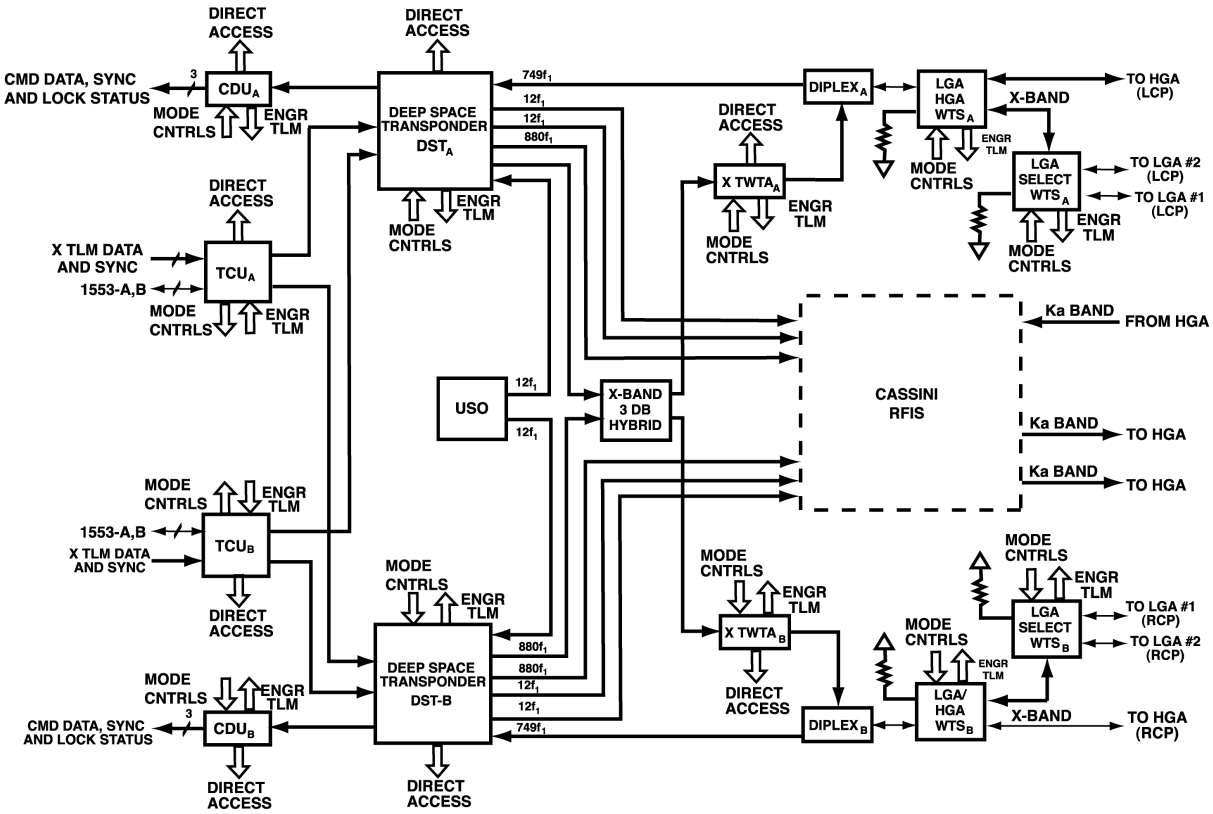


**Fig. 3-4. RFS functional block diagram.**

- Telemetry control units (TCU) 2
- X-band hybrid 1
- X-band traveling wave tube amplifiers (X-TWTA) 2
- Ultra stable oscillator (USO) 1
- X-band diplexers 2
- Waveguide transfer switches (WTS) 4

The **DST** performs the functions of both a receiver and a transmitter. The DST was built by Motorola and was also used on Mars Pathfinder.

The receiver hardware within the DST demodulates the uplink signals, and the exciter (transmitter) hardware modulates the downlink signals. Not every block-redundant element is separately available. The transponder receivers and the transponder exciters are not cross-strapped. The DST receiver outputs and the CDUs are not cross-strapped.

Each DST has an X-band **receiver**, with the receivers functionally identical to each other. Because one (but only one) DST is powered on at all times, an X-band receiver is always active. The receiver acquires phase-lock with and coherently tracks an X-band uplink that has been subject to RF path noise and Doppler frequency shift. If the uplink carrier is modulated with a command signal, the receiver demodulates and provides it to the CDU as a subcarrier. If the uplink

carrier is modulated with ranging data, the receiver demodulates and provides it to the ranging channel. The receiver provides an indication of its lock status and the uplink received carrier power (called AGC, for automatic gain control) for inclusion in the engineering telemetry.

Each DST has an X-band **exciter** that generates the downlink carrier. The DST design allows the exciter to be turned off while the receiver and CDU remain on; however, the plan is for the exciter to remain on throughout the mission. The exciter can be controlled to produce an unmodulated X-band downlink, or one that is modulated with telemetry, ranging, or DOR tones. Each kind of modulation is separately controllable as to on/off state and its modulation index. The X-band turnaround ranging channel modulation index can be controlled to "high" (35.0 deg peak) or "low" (12.25 deg peak). The DOR modulation index values are fixed at 18.7 deg for the 3.85 MHz tone and 34.7 deg for the 19.125 MHz tone.

The DST's downlink can be configured to two-way non-coherent (TWNC) on or off. In the TWNC off mode, the downlink carrier frequency is a multiple (880/749) of the uplink carrier frequency when the receiver is in lock. This is known as the two-way frequency, which falls within DSN channel 25. At all other times, the downlink carrier frequency is derived from either the auxiliary oscillator or the USO. This is known as the one-way frequency and falls within DSN channel 23. The USO is the frequency source only if the USO is powered on and enabled.

The X-band DOR tone frequencies are derived from the X-band downlink carrier frequency. The tones are 1/2200 and 1/440 of the downlink frequency, or approximately 3.825 and 19.125 MHz.[1]

The RFS provides a "12F1" (approximately 115 MHz) downlink frequency reference to the RFIS. Frequencies produced in the RFIS are expressed in terms of F1, which bears a direct relationship to the DSN channel number [7]. For channel 25, F1 = 9.579475 MHz

The **WTSs** in the RFS are electromechanical. They provide switching capability for receiving or transmitting via the HGA, LGA1, or LGA2. Refer to Figure 3-4, the **RFS functional block diagram**, for nomenclature.

The four WTSs are

- LGA/HGA $WTS_A$ for the A-side hardware
- LGA/HGA $WTS_B$ for the B-side hardware
- LGA1/LGA2 $WTS_A$ the A-side hardware
- LGA1/LGA2 $WTS_B$ for the B-side hardware.

The "LGA1/LGA2 select" switches provide the switching capability for receiving or transmitting X-band via either LGA1 or LGA2. The "LGA/HGA select" switches provide the switching capability for receiving or transmitting via the HGA or LGA.

The uplink path is determined by which DST is powered on and how the associated WTSs are configured. The downlink path is determined by which TWTA is powered on and how the associated WTSs are configured. The nominal mode of operation is to have either DST-A used

[1] The DST has the described X-band DOR tone-generation capability; however, the project does not plan to use the DOR in flight.

with TWTA-B or DST-B used with TWTA-A. This configures the uplink and downlink to opposite polarizations, therefore allowing a non-diplexed configuration at the DSN ground station. This achieves a lower system noise temperature.

The **X-band diplexer** performs the function of enabling the RFS to both transmit and receive at the same time, on separate X-band frequencies, without interference of one signal with the other. The RFS has two redundant X-band diplexer assemblies, one for each HGA/LGA polarization path pair (for example, LCP to the HGA). The diplexers perform the frequency diplexing function of interconnecting separate redundant uplink and downlink channels within the RFS to the WTSs for subsequent routing to the antennas. For the X-band uplink frequency band, the diplexer provides both bandpass filtering of the receiver input from the antenna and band-reject filtering of the TWTA output to the antenna.

The Cassini spacecraft also carries a **USO** to provide a reference for generating downlink carriers with as much frequency stability as possible when the DST is not in lock on an uplink or the noncoherent downlink mode is selected. The USO is a crystal oscillator with all circuit elements contained within an oven whose temperature is accurately controlled. The USO provides outputs to both the RFS and the RFIS at the “12F1” frequency. As mentioned in the DST section, this output can be enabled or disabled.

The X-band exciter of either DST can drive either X-band TWTA. This is accomplished with an **X-band 3-dB hybrid junction**. This “hybrid” permits operation of either exciter with either amplifier without active switching.

The **X-TWTAs** amplify the X-band exciter output to a level of 20 W (19 W end-of-life value) for transmission by the antenna subsystem. Both amplifiers may be powered at the same time, providing a linearly polarized output with a gain of 3 dB relative to a single TWTA. However, the capability to use both TWTAs simultaneously will not be considered until after the prime mission has been completed. There is not enough spacecraft power to have them both on along with the science instruments. In fact, during the tour, the X-TWTA will be put into standby mode at the end of the daily downlink and put back in operate mode at the beginning of the next day’s pass.

The **CDU** acquires and tracks the command uplink signal from the X-band receiver. It provides to the CDS the command data-bit stream, a bit synchronization clock signal, and status information indicating that the CDU is locked to a valid command waveform.

The Cassini command waveform consists of non-return-to-zero (NRZ) data that is binary phase-shift key (BPSK) modulated onto a 16-kHz sinusoidal subcarrier by the DSN. The command rates are spaced by factors of 2 from 7.8125 b/s to 500 b/s.

The **TCU** has three kinds of functions: (1) telemetry modulation and encoding, (2) interface with CDS, and (3) control of the RFS and RFIS. The telemetry modulation and encoding functions include

- Telemetry modulation index step number (0 to 63)
- The on/off state of the telemetry output driver amplifiers from each CDS to the exciter
- Use or not (direct carrier modulation) of a telemetry subcarrier
- Frequency of the subcarrier (22.5 kHz or 360 kHz)

- Use or not of convolutional coding
- (7, 1/2 or 15, 1/6) convolutional code.

The CDS provides a telemetry data stream that has been Reed-Solomon coded using a (255,223) code, with an interleaving depth of I=5. The Cassini Mission Plan [13] defines a set of telemetry modes to accommodate different engineering and science activities and the changing link capability during the mission. Thirty modes can be stored onboard at a time. Each mode represents a unique combination of data sources, rates, and destinations for data gathered and distributed by the CDS. Some of the more telecom-related mode characteristics include:

- Each telemetry mode has an associated data rate but more than one telemetry mode can have the same data rate (example: playback and real time engineering 40 b/s vs. real time engineering 40 b/s)
- All telemetry modes have both real time and recorded engineering data
- Real time engineering varies from 5 b/s to 1896 b/s
- Engineering data is always being recorded at 1638 b/s (equivalent to 1896 b/s downlink)
- The RFS packet in the engineering data is a fixed format 1024 bits in length
- The RFS packet includes RFIS engineering data
- Data rates range from 5 b/s to 248850 b/s
- Data rates include Reed-Solomon check bits; data on the downlink is always Reed-Solomon coded (by the CDS).

The interface between CDS and the TCU is regulated by CDS. The TCU collects engineering telemetry from the RFS and RFIS subassemblies, builds a telemetry packet every 2 s, and makes it and some fault protection information available for CDS pickup. CDS collects this information according to the telemetry mode schedule. CDS sends RFS commands to the TCU. These commands can be either sequenced or direct. The TCU then either changes its own configuration or the configuration of one of the other RFS or RFIS subassemblies.

The TCU can establish the following RFS states (Table 3-2), in response to CDS command input.

The power subsystem controls the following states:

- X-band TWTA-A on/off
- X-band TWTA-B on/off
- DST-A/CDU-A on/off
- DST-B/CDU-B on/off
- TCU-A on/off
- TCU-B on/off
- USO on/off
- Ka-band TWTA on/off

**Table 3-2. RFS states allowed by TCU.**

| System Element | Controlled Modes | Allowed States |
|---|---|---|
| X-band TWTA A | Power state | Operate/standby |
| X-band TWTA B | Power state | Operate/standby |
| DST | USO input | Enable/inhibit |
| | TWNC | On/off |
| | Ranging modulation state | On/off |
| | Ranging modulation index | High/low |
| | DOR modulation | On/off (not used) |
| | X-exciter power | On/off |
| CDU | CDU rate | 7.8125, 15.625, 31.25, 62.5, 125, 250, 500 b/s |
| | CDU reset | Reset |
| TCU | Subcarrier state | On/off |
| | Subcarrier frequency | High/low |
| | Convolutional coding state | On/off |
| | Type of coding | (7,1/2) or (15,1/6) |
| | Telemetry mod index | 0 to 63 |
| | Telemetry input source | CDS-A or CDS-B |
| | Telemetry output driver to DST-A | On/off |
| | Telemetry output driver to DST-B | On/off |
| Ka-band TWTA | Operate/standby | |
| S-band transmitter | DST-A or B frequency reference | |
| HGA/LGA WTS (2) | HGA/LGA | |
| LGA1/LGA2 WTS (2) | LGA1/LGA2 | |

- Ka-band exciter on/off
- Ka-band translator on/off
- S-band transmitter on/off.

## 3.3 Radio Frequency Instrument Subsystem

The Cassini Radio Frequency Instrument Subsystem (RFIS) produces Ka-band and S-band signals for radio science experiments during interplanetary cruise and the Saturn orbital phases.

The RFIS includes the following major elements, as shown in Fig. 3-5.

- Ka-band exciter
- Ka-band traveling wave tube amplifier (Ka-TWTA)
- Ka-band translator (phase locked, to receive and translate the Ka-band uplink signal)
- S-band transmitter (to provide an S-band downlink signal)
- Microwave components.

The RFIS elements have neither telemetry modulation nor command demodulation capability. The RFIS-ANT interface is to the HGA only. The following description is adapted from [14].

**Ka-band exciter (KEX)**. The Ka-band exciter generates a nominal 32 GHz downlink carrier using the 8.4 GHz X-band carrier and the 115 MHz signal from the RFS. The KEX includes an RF power combiner for the 32 GHz signal from the Ka-band translator and the 32 GHz from the KEX. The carrier generated by the KEX is known as the Ka-1 carrier.

**Ka-band translator (KAT)**. The Ka-band translator receives a nominal 34 GHz uplink carrier from the high gain antenna and translates this by a factor of 14/15 for retransmission to the DSN. The KAT provides a coherent communications link at Ka-band that greatly reduces the noise produced by interplanetary media. The Gravitational Wave Experiment, a search for low frequency gravitational waves (millihertz region) and a Cassini prime science objective, requires this increased sensitivity. The carrier generated by the KAT is known as the Ka-2 carrier. The translation noise figure is 6.5 dB, referenced to the RFIS-ANT Ka-band HGA interface.

**Ka-band TWTA**. The Ka-band TWTA amplifies the signals from the KAT and the KEX to a sufficient power level to be received by the DSN. The RFIS has one Ka-TWTA. The TWTA can be placed in standby or operate mode by the TCU.

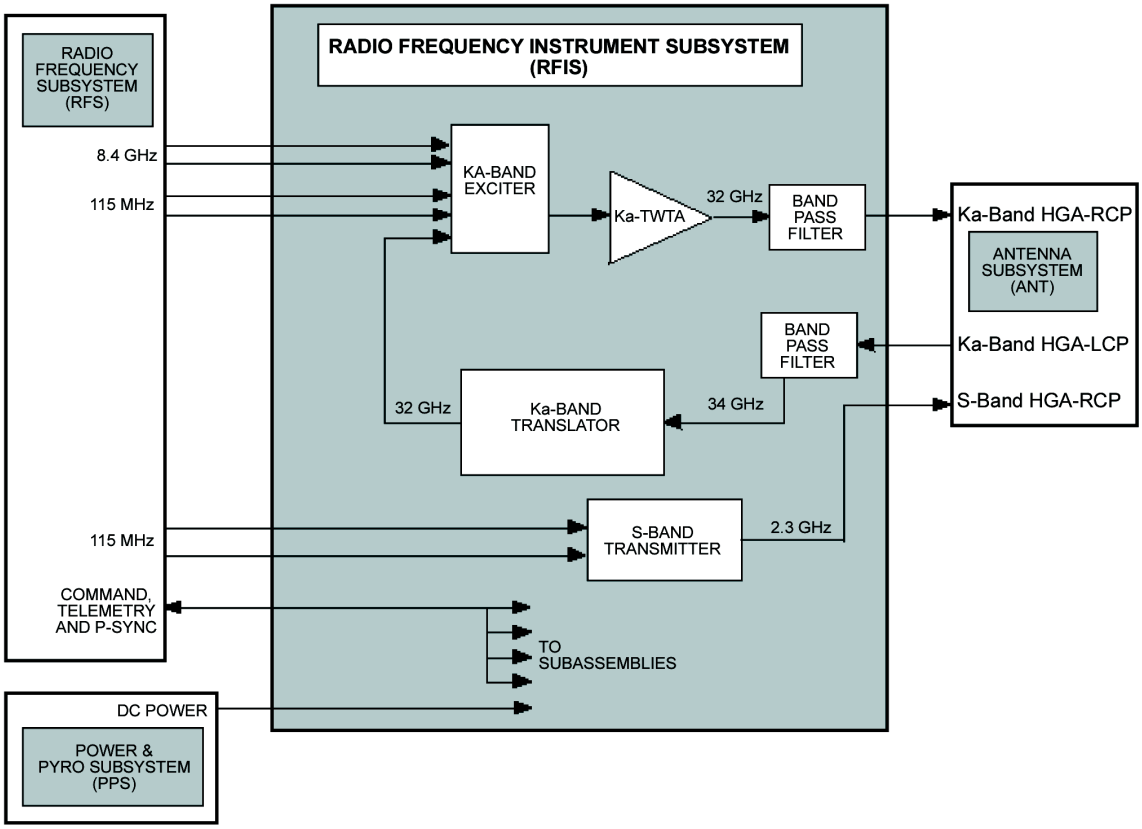


**Fig. 3-5. RFIS functional block diagram.**

Through combination of the X-band uplink, the "12F1"frequency from the DST, and the Ka-band translated carrier input, the RFIS is able to generate downlink carriers on the following channels.

- Channel 23 noncoherent downlink
- Channel 24 Ka-band translation
- Channel 25 coherent with in-lock X-band uplink
- Channel 23 + Channel 24
- Channel 24 + Channel 25.

**S-band transmitter (SBT)**. The S-band transmitter receives a "12F1" signal (nominally 115 MHz) from the RFS, multiplies it by 20 (to 2298 MHz nominally), and amplifies it to 10 watts.

The RFIS accepts one or the other of the following "12F1" inputs for the S-band downlink.

- Channel 23 noncoherent downlink
- Channel 25 coherent with in-lock X-band uplink.

The 12F1 signal must be selected from either DST-A or DST-B.

**RFIS microwave components**. These include the Ka-band bandpass filters shown in Fig. 3-3. The bandpass filters provide isolation between the 34-GHz frequency received by the RFIS and the 32-GHz frequency transmitted by the RFIS.

## 3.4 Huygens Probe/Cassini Orbiter Relay Link

The probe data relay subsystem has components on both the Huygens Probe and the Cassini Orbiter. The relay subsystem provides a one-way communication link from the probe to the orbiter. There are redundant relay transmitters in the probe and redundant relay receivers in the orbiter. In each transmitter, data from the probe instruments modulates a subcarrier that, in turn, frequency-modulates an RF carrier [6]. Both probe relay transmitters operate during descent, and each has its own antenna. The data stream on one link is delayed by about 6 s with respect to the other to avoid data loss from brief transmission outages.

The relay-link data rate is 8192 b/s. The modulation index is 1.34 rad. The RF output is 40.7 dBm (11.7 W) at each carrier frequency, 2040 MHz and 2098 MHz. The lower frequency comes from the transmit ultrastable oscillator (TUSO), and the higher frequency from a temperature-compensated crystal oscillator. The link design assumes a minimum end-to-end frame-error rate of $10^{-5}$, with a presumed orbiter-to-DSN error rate of zero [15].

The probe's transmitter antenna polarization is LCP at 2040 MHz and RCP at 2098 MHz. The on-boresight probe antenna gain is +5 dBi at 2040 MHz and +3 dBi at 2098 MHz. The patterns at both frequencies are fairly broad to accommodate the changing angle between the probe antenna boresight and the line of sight from the probe to the orbiter throughout the probe descent. The difference between maximum and minimum antenna gain at ~60 deg from boresight is 3 dB peak-to-peak. In June 2001, new profiles of probe-orbiter distance and boresight-to-orbiter antenna angle to accommodate the as-built relay receiver Doppler capability were

approved [16,17]. The Titan atmospheric attenuation at either relay frequency is very small, less than 0.1 dB. The link design presumes the aspect angle will be between 20 and 60 deg.

Aboard the orbiter, two RF carriers are received by the HGA, whose LCP and RCP feeds route them to redundant probe support avionics (PSA).[2] The HGA provides a boresight gain of 34.7 dBi (2040 MHz) or 35.3 dBi (2098 MHz). HGA pointing losses during relay are 0.5 dB maximum. Each PSA consists of a receiver front end (RFE), an S-band receiver, and a data-handling section. The noise at the RFE input includes contributions from the antenna and the circulator and two RF couplers between the antenna and the low-noise amplifier (LNA). The LNA has a noise figure of 1.5 dB (2048 MHz) and 1.8 dB (2098 MHz), resulting in a total system temperature of 230 K (2048 MHz) or 256 K (2098 MHz).

The RFE output goes to the S-band receiver, which performs carrier, subcarrier, and symbol clock acquisition and tracking. PSA-A frequencies come from the receive ultrastable oscillator (RUSO). The receiver output goes to the data handling section, which decodes the symbol data and passes it to the orbiter's CDS via a bus interface unit.

## 3.5 Telecom System Mass and Input Power

For comparison with similar functions in other spacecraft, Table 3-3 shows values of mass and spacecraft power for major elements of the Cassini telecom hardware. Where available, the power values are taken from in-flight engineering telemetry. The telemetry confirms there has been negligible drift in power usage by the receiver, exciters, or power amplifiers from launch to 2001.

[2] The PSA receiving and signal processing hardware and software in the orbiter are provided by ESA. The TUSO on the probe, the RUSO in the orbiter's PSA, and the RFS USO described in Section 3.2 are separate ultrastable oscillators.

**Table 3-3. Cassini Orbiter telecom system power and mass summary.**

| Telecom system unit | Input power (watts)*** | Mass (kg)* | Dimensions |
|---|---|---|---|
| **Antenna** | | 118.24 (allocation) | |
| HGA (including LGA-1) | N/A | 100.6 | 4-m dia reflector |
| LGA-1 | N/A | | |
| LGA-2 | N/A | 0.5 | 6.4-cm diameter, 33.5-cm length (max) |
| Transmission lines | | 12.5 | |
| **RFS*** | | 47.41 (allocation) | |
| Deep Space Transponder (2) | 10.2 | 8.0 | 18.8 × 3.0 × 11.5** |
| Command Detector Unit (2) | powered by DST | 0.7 | 12.7 × 12.7 × 1.8** |
| Telemetry Control Unit | 5.1 | 7.3 | 21.1 × 19.4 × 15.3** |
| Ultra Stable Oscillator | 3.0 | 1.8 | 19.4 × 10.2 × 12.8 |
| X-band TWTA-active (2) | 53.7 | 10.8 | 16.7 × 18.4 × 41.8** |
| X-band TWTA-sleep | 13.0 | n/a | n/a |
| Waveguide Transfer Switch (4) | | 1.5 | 8.2 × 4.3 × 10.5** |
| X-band diplexer (2) | passive | 3.4 | 49.4 × 9.4 × 8.9** |
| 3 dB Hybrid coupler (1) | passive | 0.1 | |
| **RFIS***** | | 15.00 (allocation) | 41.8 × 42.5 × 17.8** |
| Ka-band TWTA-active | 33.7 | 4.9 | |
| Ka-band TWTA-sleep | 8.0 | n/a | |
| S-band Transmitter | 41.3 | 2.7 | |
| Ka-band Exciter | 3.1 | 2.4 | |
| Ka-band Translator | 8.0 | 3.5 | |
| Microwave Components | n/a | 0.1 | |

* For multiple units, the stated mass is for the total (for example, each DST weighs 4 kg.)
** Maximum envelope (nearest 0.1 cm), length × width × height
*** Does not include turn-on or turn-off power transients

# Section 4

# Ground System

## 4.1 Background

The DSN* is the ground system that transmits to and receives data from the Cassini spacecraft and many other deep-space missions. The DSN consists of three deep-space communications facilities placed approximately 120 deg apart around the world: at Goldstone, in California's Mojave Desert; near Madrid, Spain; and near Canberra, Australia.

This section includes brief descriptions and functional block diagrams of DSN X-band and Ka-band systems that provide carrier tracking, navigation and radio science radiometric data (Doppler and ranging) collection, command uplinking, and telemetry reception and decoding for the Cassini orbiter. The Huygens Probe will transmit S-band to the Cassini Orbiter but not directly to the DSN.[1]

Through 2001, the ground system for X-band command, telemetry, and radio metrics has been essentially the same as the ground system used for communicating with DS1.[2] Those ground systems were defined in *The Deep Space Network/Flight Project Interface Design Handbook, 810-5*, Rev. D [18], an internal JPL document. Cassini typically uses some combination of 34-m BWG (DSS-25, 34, 54), 34-m HEF (DSS-15, 45, 65), and 70-m stations (DSS-14, 43, 63). Refer to the DS1 article [19] for a description of the 810-5, Rev. D systems.

From 2000-2002, major systems of the DSN have been upgraded or newly implemented. These systems are documented in an update to [18], *The DSMS Telecommunications Link Design Handbook*, 810-005, Rev. E [20] This section describes those ground capabilities as

[1] In-flight tests with the relay receiver on the orbiter have been done using the S-band transmit capability at DSS-24.

[2] "Deep Space 1 Telecommunications", http://descanso.jpl.nasa.gov/index_ext.html, *Design and Performance Summary Series*, Article 2.

*Look up this and other abbreviations and acronyms in the list that begins on page 66.

they will be used for the remainder of the Cassini cruise mission and the tour. During the tour, arrays of DSS-14+15 and DSS-63+65 will also be used.

## 4.2 The 34-Meter High-Efficiency Station[3]

The DSN 34-m Antenna Subnet contains three 34-m diameter HEF antennas. These antennas employ an elevation over azimuth (AZ-EL) axis configuration, a single dual-frequency feedhorn, and a dual-shaped reflector design. One antenna (DSS-15) is located at Goldstone, California; one (DSS-45) near Canberra, Australia; and one (DSS-65) near Madrid, Spain.

A block diagram of the 34-m HEF microwave and transmitter equipment is shown in Fig. 4-1.

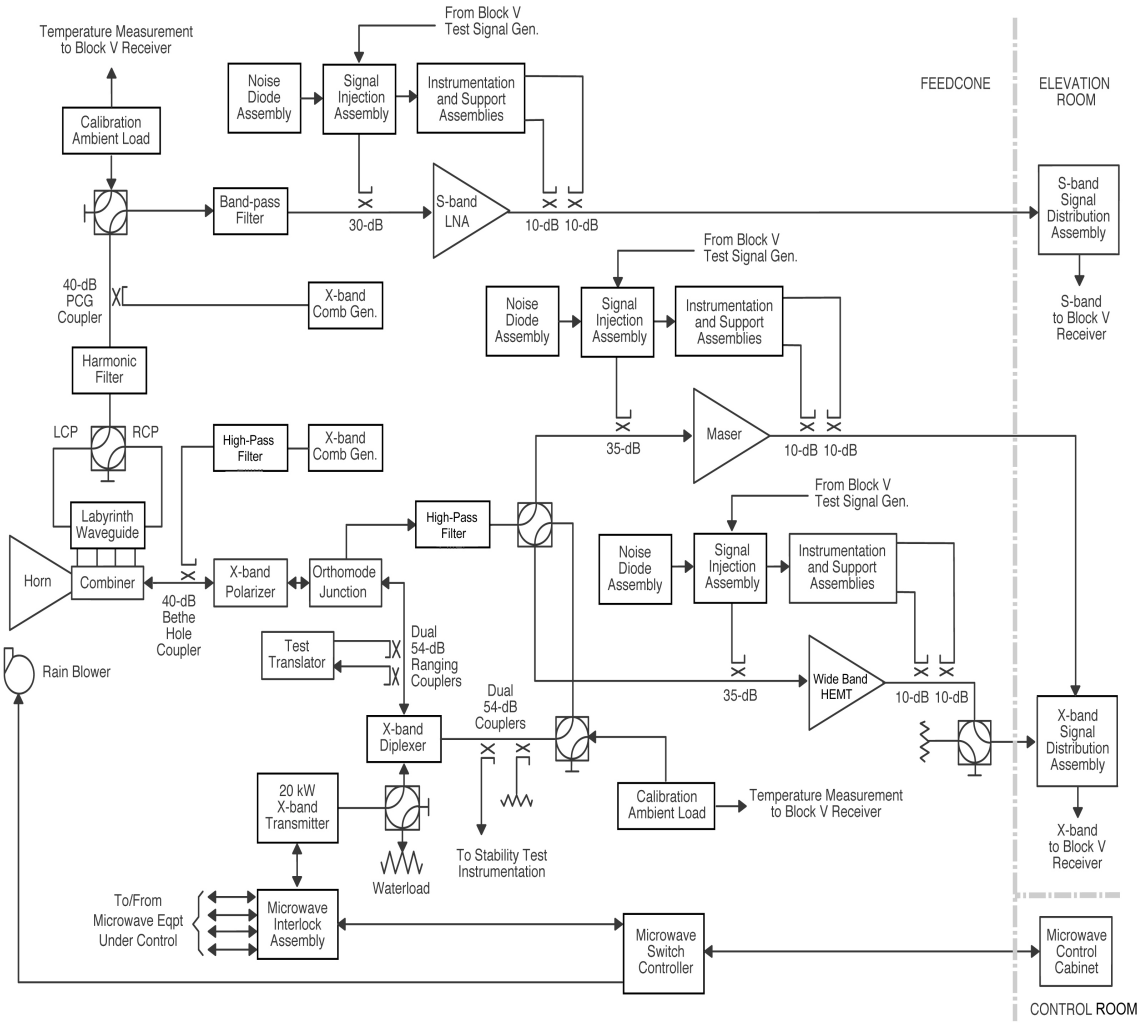


**Fig. 4-1. Functional diagram of 34-m HEF transmitter and microwave subsystem.**

[3] 810-005, Module 103.

An orthomode junction for X-band is employed that permits simultaneous RCP or LCP operation. For listen-only operation or when transmitting and receiving on opposite polarizations (Cassini normal operation), the low-noise path (orthomode upper arm) is used for reception. If the spacecraft receives and transmits simultaneously with the same polarization, the diplexed path must be used and the noise temperature is higher. The 34-m HEF stations also have S-band capability, but this is not required for Cassini.

## 4.3 The 70-Meter Station[4]

The 70-m stations provide S-band uplink and downlink for those missions that require those frequencies. For Cassini, the stations' X-band uplink and downlink are used. For a functional block diagram of the transmitter and microwave configuration of 70-m stations, see [8] or [9].

In November 2001, X-band uplink capability became operational at the last of the three 70-m stations. The upgraded 70-m stations also employ the X-band Transmit-Receive (XTR) feedcone. This cone employs a unique feed design that includes a diplexing junction to inject the transmitted signal directly into the feed. The 20-kW X-band transmitter goes through a polarizer and the diplexing junction to the feed. From there, it passes through an S-band/X-band dichroic reflector on its way to the subreflector and the main 70-m reflector that sends the uplink on its way to the spacecraft.

The X-band downlink from the main reflector is focused by the subreflector and passes through the dichroic reflector to separate it from the S-band signal path. From the diplexing junction, the X-band downlink goes to a polarizer to select RCP or LCP. The X-band downlink from the X-band HEMT preamplifier is frequency downconverted for input to the block V receiver.

## 4.4 Carrier Tracking[5]

The motion of a transmitter relative to a receiver causes the received frequency to differ from that of the transmitter. This is the Doppler effect. The uplink and downlink carriers thus provide a means of measuring the station-to-spacecraft velocity as a Doppler shift. In addition, the DST receives ranging modulation on the uplink and modulates it on the downlink to provide a means of measuring the station-to-spacecraft distance. Together, Doppler and ranging data provide radio navigation inputs to the project.

Since the frequency of a carrier equals the rate-of-change of carrier phase, the downlink channel supports Doppler measurement by extracting the phase of the downlink carrier. At the station receiver, the accumulating downlink carrier phase is measured and recorded. When the measurement is one-way, the frequency of the spacecraft transmitter (on Cassini, the USO) must typically be inferred. A much more accurate Doppler measurement is possible when the spacecraft coherently transponds a carrier arriving on the uplink.

[4] 810-005, Module 101.
[5] 810-005, Module 202.

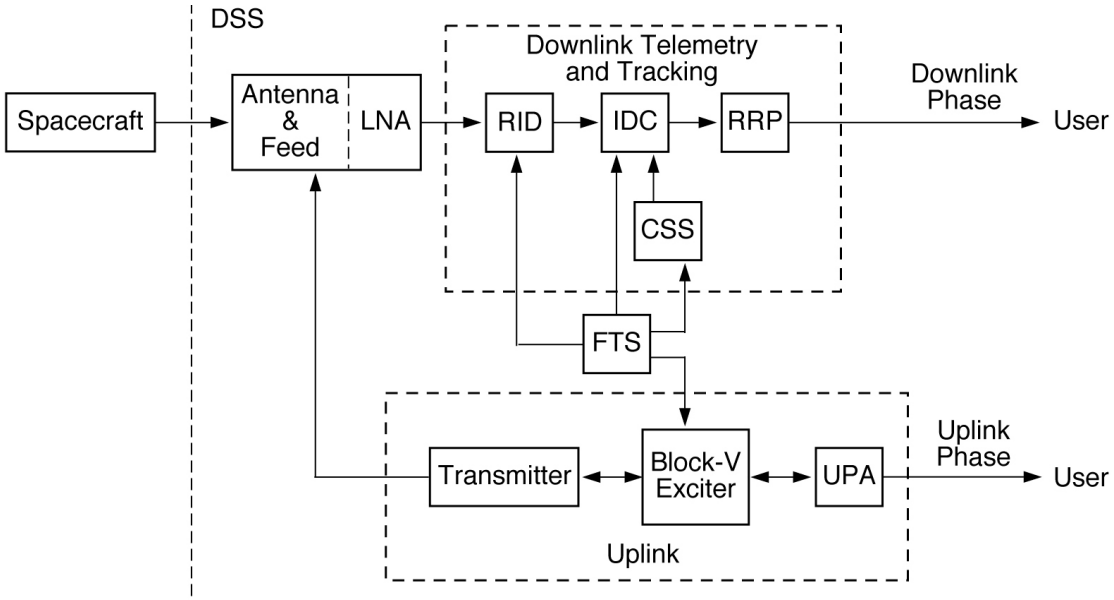


**Fig. 4-2. Measurement of coherent two-way (or three-way) Doppler.**

Figure 4-2 shows the station's systems involved in Cassini two-way Doppler during the latter part of the outer cruise and the tour.

The uplink carrier frequency is synthesized within the exciter from a highly stable frequency reference provided by the Frequency and Timing Subsystem (FTS). The uplink carrier may be either constant or varied in accord with a tuning plan (commonly, in the case for Cassini, called a "ramped uplink"). In either case, the phase of the uplink carrier is archived for use in the computation of a Doppler effect.

For all Doppler measurements (one-, two-, and three-way), the downlink signal is routed from the antenna feed/low noise amplifier (LNA) to the downlink channel. Within the radio-frequency to intermediate-frequency downconverter (RID), which is located at the antenna, a local oscillator frequency is generated by frequency multiplication of a highly stable frequency from the FTS. The incoming downlink signal is heterodyned with this local oscillator frequency to produce an intermediate-frequency (IF) signal that is sent to the signal processing center (SPC). There the IF to digital converter (IDC) changes the frequency of the IF signal by a combination of up-conversion and down-conversion to a final analog frequency of approximately 200 MHz and then performs analog-to-digital conversion. The final analog stage of down-conversion uses a local oscillator supplied by the channel-select synthesizer (CSS), which is also part of the downlink channel. The frequency of the CSS is synthesized within the downlink channel from highly stable frequency references provided by the FTS.

All analog stages of down-conversion are open-loop, and so the digital signal coming out of the IDC reflects the full Doppler effect on the downlink carrier. The receiver ranging processor (RRP) accepts this digital signal and extracts carrier phase with a digital phase-locked loop.

## 4.5 Command[6]

Cassini's commands, including prefix symbols and command data symbols, are normally generated from a command workstation in the mission support area (MSA). A limited number of pre-defined commands may be stored at the deep space communications complexes (DSCCs) for use in an emergency (such as loss of communication from an operations center during a critical mission event) to place a spacecraft in a safe condition.

The transmitter power for the command uplinks is 20 kW at the 34-m HEF stations and the 70-m stations. It is 4 kW at the 34-m BWG stations.

The DSN Command System produces a pulse-code modulated (PCM) non-return-to-zero-level (NRZ-L) data waveform. Manchester (Bi-phase-L) encoding is available providing a transition for each bit, that is, $01_2$ for a command bit *zero* and $10_2$ for a command bit *one*. The resultant waveform is used to modulate a subcarrier in the binary phase-shift-keyed (PSK) mode. The Cassini subcarrier is a 16-kHz sine wave subcarrier. Command bit rates can be specified to five significant figures (for example, 7.8125 or 500.00). Cassini command rates are from 7.8125 b/s to 500 b/s.

To balance the performance of uplink carrier detection, command detection (a function of bit rate), and ranging performance, the RF carrier may be phase-modulated at modulation indices from 0.3 to 1.57 rad (peak) for sine-wave or square-wave subcarriers. Through the command Standards & Limits tables, four standard modulation index settings are available to the ACE by command buffer selection. The modulation index for X-band carriers must be limited to 1.4 rad (peak) if verification feedback from the exciter to the command modulator (long-loop verification) is used.

## 4.6 Telemetry[7]

Figure 4-3 shows the data flow at the 34-m and 70-m stations involved in the processing of a telemetry signal through the stage of demodulation. The arriving signal is routed from the antenna LNA to the downlink channel. Within the RID, the incoming downlink signal is heterodyned with this local oscillator. The IF signal that results is sent to the signal processing center (SPC). Much of the signal path for telemetry is in common with that for Doppler, previously described.

The receiver ranging processor (RRP) accepts the digital signal and performs carrier, subcarrier, and symbol synchronization and demodulation. For purposes of telemetry, the output of the RRP is a stream of soft-quantized symbols, suitable for input to a decoder.

The decoding of Cassini's convolutional code is performed by one of two maximum-likelihood convolutional decoders (MCDs): the Block 2 MCD (B2MCD, also called the MCD2) and the Block 3 MCD (B3MCD, also called the MCD3) that are hardware implementations of the Viterbi decoding algorithm. The B2MCD is intended for decoding constraint length 7, rate 1/2 (7,1/2) codes, whereas the B3MCD is a general purpose decoder, and the only one capable

[6] 810-005, Module 205.
[7] 810-005, Module 209.

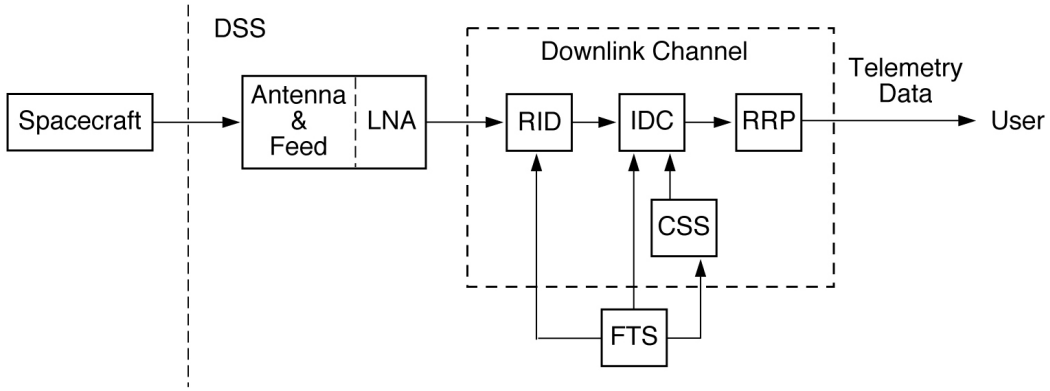


**Fig. 4-3. Production of telemetry symbols for decoding.**

of decoding Cassini's (15,1/6) convolutional code. The B3MCD uses the full eight bits of input symbol quantization provided by the receiver. This provides decoding performance superior to the B2MCD, which must map the eight-bit symbols from the receiver into three-bit symbols. Unfortunately, there are a limited number of B3MCDs at each complex, thus the requirement for these in scheduled passes is indicated by particular configuration codes.

Errors in convolutionally coded channels tend to occur in bursts that result when noise causes the decoder to momentarily follow the wrong path through the decoding trellis. On Cassini the combination of an outer Reed-Solomon (RS) code with an inner convolutional code provides good burst-error correction with minimal bandwidth expansion. Cassini's Reed-Solomon decoding is done in the Advanced Multimission Operations System (AMMOS) at JPL.

## 4.7 Ranging[8]

As part of its Network Simplification Plan (NSP) the DSN is undergoing a redesign of the uplink and downlink architecture to achieve simplified operations and increased performance. A major feature of the modification is the separation of the uplink functions involved in ranging and Doppler from the downlink functions, allowing recovery from anomalies on one without affecting the other.

Through 2001, Cassini ranging has depended on the previous design that employed a separate piece of equipment called the sequential ranging assembly (SRA). SRA ranging is described in [18] or [19]. The new ranging system, which Cassini will use in the latter part of outer cruise and the tour, does not require a real-time interface between the uplink and downlink elements. The lack of a hardware connection between the uplink and downlink elements of the ranging equipment makes it possible to perform range measurements in the three-way tracking

[8] 810-005, Module 203.

mode.[9] The ranging-modulated uplink is transmitted from one station and the ranging-modulated downlink received at another.

NSP ranging replaces the SRA with separate uplink and downlink ranging processors. Local code models are generated that match the SRA sequential tone ranging. The tracking data delivery subsystem (TDDS) replaces the metric data assembly (MDA) and the radio metric data conditioning (RMDC) function of preparing the data for delivery to the user.

The NSP architecture for the DSN ranging system is shown in Fig. 4-4.

The architecture consists of a front-end portion, an uplink portion, and a downlink portion. The front-end portion consists of the microwave components, including a low-noise amplifier (LNA) and the antenna.

The uplink portion includes the uplink ranging assembly (URA), an exciter, the transmitter, and the controller, referred to as the uplink processor assembly (UPA). The downlink portion includes the RF-to-IF downconverter (RID), the IF-to-digital converter (IDC), the receiver and ranging processor (RRP) and the downlink channel controller (DCC). The downlink telemetry and tracking (DTT) subsystem and the uplink (UPL) subsystem provide the essential functional capability for NSP ranging.

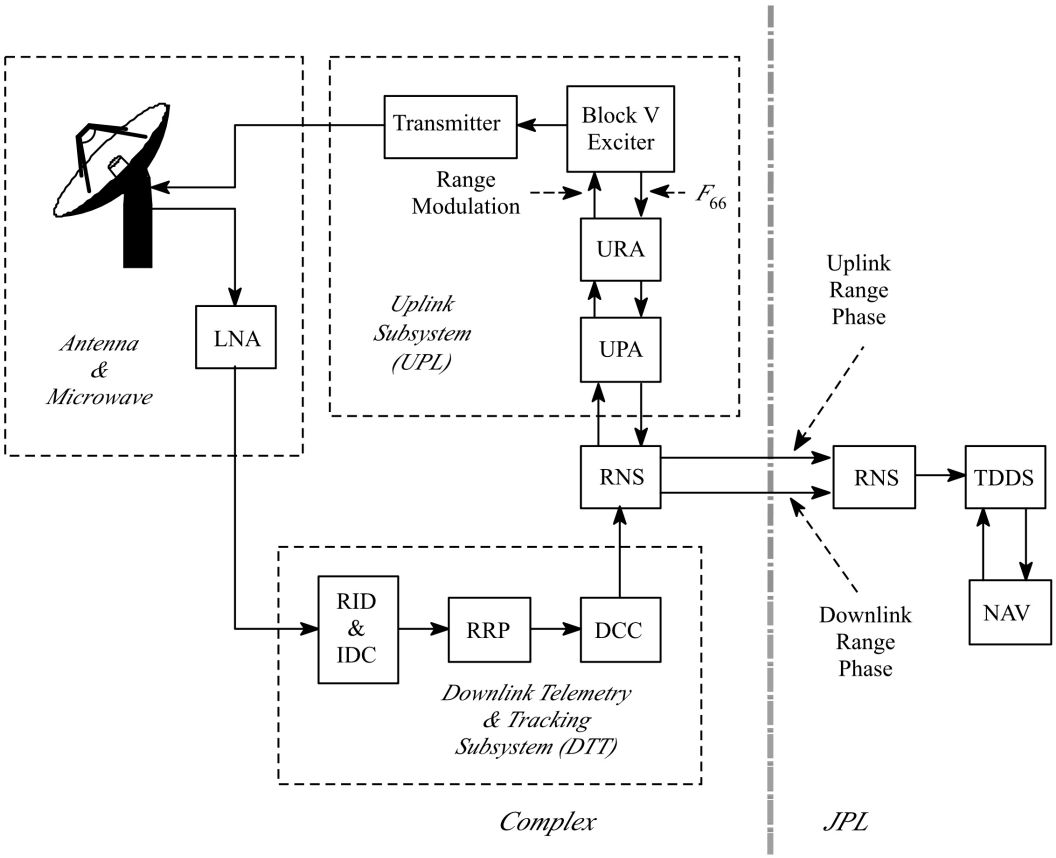


**Fig. 4-4. Ranging architecture in the NSP era.**

[9] Three-way SRA ranging has been attempted on both Cassini and DS1 at times when 34-m link performance was insufficient and the 70-m did not yet have X-band uplink capability. The SRA three-way ranging data was found to be unusable because of uncorrectable biases. See **Lessons Learned**.

Control of the ranging function is within the DTT. Control signals from the DTT are coupled to the URA in the UPL via the Reliable Network Service (RNS) and the UPA. The URA generates the sequential ranging codes for two-way and three-way ranging and forwards them to the exciter where they are modulated onto the uplink. It also monitors the uplink ranging phase and forwards this data to the TDDS.

The amplified downlink signal from the microwave (front-end) is downconverted by the RID (located on the antenna) and fed to the IDC where it is sampled at 160 Msamples/s into an eight-bit digital signal at the RRP. After processing, the downlink range phase data are delivered to the TDDS by the DCC, via the station RNS and a similar function at JPL. The TDDS formats the ranging data and passes the uplink and downlink phase information to the navigation (NAV) subsystem. Subsequently, the NAV provides the ranging data to projects.

## 4.8 Radio Science[10]

All radio science experiments require use of the antenna, microwave, antenna-mounted receiving, and frequency-and-timing equipment at the stations. They also require the Ground Communications Facility (GCF) to deliver the data from the stations to users and the Advanced Multimission Operations System (AMMOS) at JPL, where experiments are monitored. DSN stations are designed to meet radio science requirements for stability.

Figure 4-5 is a block diagram of the open-loop radio-science receiving capability.

The receiving equipment on each DSN antenna produces one or more IF signals with a nominal center frequency of 300 MHz and a bandwidth that depends on the microwave and low-noise amplifier equipment on the 34-m or 70-m antenna. These IF signals are routed to a distribution amplifier (not shown) that provides multiple copies of each signal for use by the radio-science receivers (RSRs), the telemetry-and-tracking receivers, and other equipment in the SPC.

One copy of each signal is provided to the RSR IF switch that further divides and amplifies it with the result being that any of the RSR channels can be connected to any antenna’s IF signal.

There are two dedicated RSRs at the Goldstone DSCC and one at the Canberra and Madrid DSCCs. Each RSR contains two channels. The design of the system software is such that, from the user's viewpoint, each RSR channel can be considered to be an independent open-loop receiver.

## 4.9 DSN Upgrades Specifically for Cassini

The radio science requirements for this mission drove several upgrades to the DSN known as the Cassini DSS-25 Upgrade Task.

[10] 810-005, Module 209.

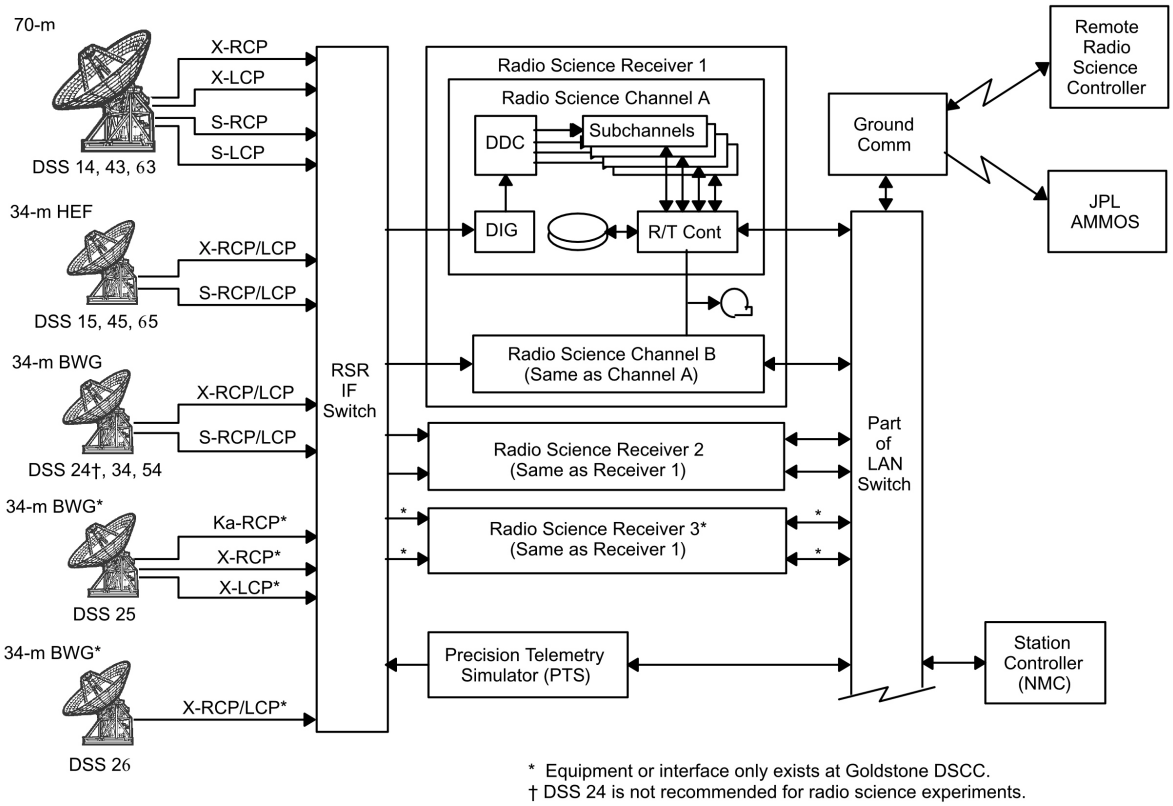


**Fig. 4-5. DSN radio-science receiving system configuration diagram.**

- Monopulse tracking—automatically adjusts antenna-pointing control to track the main lobe at the Ka-band downlink beamwidth, which is four times narrower than the X-band beamwidth
- Aberration correction system—offsets the uplink and downlink beams to compensate for the Ka-band beamwidth being so narrow
- RSR—open-loop receiver that replaces the digital signal processor-recorder (DSP-R), an older type of open-loop receiver
- Advanced media calibration system—high-accuracy troposphere calibration system to quantify line-of-sight delays
- 800-W KUPL—Ka-band exciter, transmitter, and UPA.

In addition, the Ka-band exciter/transmitter requires the network monitor and control (NMC) function to operate. For cruise, the monopulse system requires the NMC for monitor data via MON-0158 monitor data format.

These upgrades also affected the ground software used to schedule and control station operation. Many new configuration codes had to be added. The sequence of events generation (SEG) software was updated. The DSN keywords dictionary was updated. The software that expands the DSN keywords file (DKF) into the DSN SOE had to be updated.

# Section 5

# Telecom Link Performance

The Telecom Forecaster Predictor (TFP*) [21] is used to generate predictions of Cassini link performance. This section contains a representative selection of predictions for operation via the LGA during inner cruise (see **operational scenarios**) and via HGA during outer cruise and Saturn orbital operations. Predictions are for the 34-m HEF station at Goldstone, DSS-15. The predictions are in the form of design control tables (DCTs) and plots.

These representative predictions differ in several significant ways from the exacting predictions required for project mission planning and performance analysis.

- These predictions assume a worst-case constant elevation angle of 10 deg, with a data point once every 10 days (instead of having a number of points for each station pass, with performance calculated at the actual changing elevation angles of the stations)
- These prediction plots show only the mean value of the performance parameters (instead of a more conservative value, such as (mean minus 3 sigma) for uplinks and (mean minus 2 sigma) for downlinks).

## 5.1 Inner Cruise (Low-Gain Antenna)

The plots start at and the DCTs are for May 5, 1998 (1998-125), an arbitrary time during inner cruise. The discontinuity in the plots at a relative time of 470 days is the Earth flyby on August 18, 1999. The spacecraft is in the sunshielded state in inner cruise, meaning the HGA is sunpointed.

The **uplink DCT** (Table 5-1) assumes operation via LGA2, 62.5 b/s command rate, with 0.9 rad modulation index. The DCT also includes uplink ranging modulation at 3-dB carrier suppression (45-deg modulation index). The TFP plots that follow the uplink DCT show the time-variable performance at 10-deg elevation angle starting from the DCT date and continuing to February 2000, the start of outer cruise (and use of HGA at Earthpoint). The plots show that

*Look up this and other abbreviations and acronyms in the list that begins on page 66.

the command bit $E_b/N_0$ (signal energy per bit to noise spectral density ratio) is generally above threshold[1] using one LGA or the other. When it was not, commanding was accomplished without simultaneous ranging modulation or possibly at a lower command rate.

The **downlink DCT** (Table 5-2) presumes a 40-b/s telemetry rate at 55-deg telemetry modulation index and the simultaneous presence of a ranging downlink at the "high" (0.81-rad) modulation index. The plots show periods, especially in late inner cruise that neither LGA would support this configuration.[2] The situation required a telemetry-only downlink or scheduling a 70-m station for the downlink.

The **ranging DCT** (Table 5-3) has only ranging modulation (at 6-dB carrier suppression) on the uplink and only ranging modulation (at the 0.81 rad modulation index) on the downlink. Even so, there are significant periods that the mean predicted $P_r/N_0$ (ratio of ranging power and noise spectral density) was below the threshold.[3] Early in the mission, before the 70-m stations had X-band uplink capability, Cassini tried three-way ranging, with 34-m HEF uplink and 70-m downlink. In theory, the three-way capability is about 6 dB higher; however, uncorrectable biases rendered three-way ranging of minimal value to the project navigation.

## 5.2 Outer Cruise and Saturn Orbit (High-Gain Antenna)

The three HGA DCTs (Tables 5-4 through 5-7) define the uplink, downlink, and ranging performance for DSS-15 and the Earth-pointed HGA for July 1, 2004. The uplink DCT assumes the standard HGA command rate of 500 b/s with a modulation index of 1.3 rad, along with ranging modulation at 3-dB carrier suppression. The downlink DCT assumes a telemetry rate of 14,220 b/s at a modulation index of 80 deg, and a ranging downlink at the "low" (0.27-rad) modulation index. The ranging DCT documents the turnaround channel for these same parameters.

The three HGA figures (Figs. 5-7 through 5-9) are based on the same station and HGA configuration as these DCTs. The plots start at January 31, 2000 and end on July 1, 2008. Thresholds for uplink command $E_b/N_0$, downlink telemetry $E_b/N_0$, and downlink ranging $P_r/N_0$ are the same values as for the LGA. The plots show that command, telemetry, and ranging remain above threshold. Telemetry has the least margin. Requirements for higher telemetry rates are accommodated in ways similar to inner cruise, such as use of 70-m stations or not ranging.

---

[1] Threshold for an uncoded command data channel with bit-error rate no greater than $10^{-5}$ occurs when the $E_b/N_0$ is +9.6 dB. See row 35 (required $E_b/N_0$) of Table 5-1, and the horizontal line at 9.6 dB $E_b/N_0$ in Figs. 5-1 and 5-2.

[2] Threshold for a (15,1/6) convolutionally coded telemetry data channel with bit-error rate no greater than $5\times10^{-3}$ occurs when the $E_b/N_0$ is +0.31 dB. See row 40 (required $E_b/N_0$) of Table 5-2, and the horizontal line at 0.3 dB $E_b/N_0$ in Figs. 5-3 and 5-4.

[3] Downlink threshold for turnaround ranging is in terms of $P_r/N_0$. The $P_r/N_0$ threshold is not as crisply defined as $E_b/N_0$ threshold is for command or telemetry data channels. Cassini has defined a $P_r/N_0$ threshold of –8.5 dB, as a value above which the ranging quality is good. Ranging quality is based on experience and takes into account the percentage of attempted ranging acquisitions received, and the amount of range scatter among the acquisitions. See row 18 (DL required $P_r/N_0$) in Table 5-3 and the horizontal line at –8.5 dB $P_r/N_0$ in Figs. 5-5 and 5-6.

**Table 5-1. Uplink DCT (34-m HEF, LGA2 sunshielded, 05/05/1998).**

| | | | | |
|---|---|---|---|---|
| Produced by CAS V1.1 10/04/1999 | | | | |
| Predict | 2004-181T00:00:00.000 UTC | | | |
| Up/Down-Link | Two-Way | | | |
| RF Band | X:X | | | |
| Telecom Link | DSS-15-HighGain-DSS-15 | | | |
| COMMAND UP-LINK PARAMETER INPUTS | | | | |
| Cmd Data Rate | 500.0000 b/s | | | |
| Cmd Mod Index | 1.30 Radians | | | |
| Cmd RngMod Index | 44.9 Degrees | | | |
| Operations Mode | Nominal | | | |
| Mission Phase | Early Cruise | | | |
| DSN Site | Gold-Gold | | | |
| DSN Elevation | Fixed Val Deg | | | |
| Weather/CD | Historical | | | |
| Attitude Pointing | EarthPointed | | | |
| EXTERNAL DATA | | | | |
| Range | (km) | 1.5021e+09 | | |
| Range | (AU) | 1.0041e+01 | | |
| One-Way Light Time (OWLT) | (hh:mm:ss) | 01:23:30 | | |
| Station Elevation(s) | (deg) | [10.00] | | |
| DOFF: Hga,Lga1,Lga2 | (deg) | 0.00 | 0.00 | 90.00 |
| Clk: Hga,Lga1,Lga2 | (deg) | 141.59 | 141.59 | 0.00 |
| Added S/C Ant Pnt Offset | (deg) | 0 | | |
| DSN Site Considered: | DSS-15/DSS-15 | | | |
| At Time: | 0.00 hours after the start time | | | |

*(Continued on next page)*

**Table 5-1. Uplink DCT (34-m HEF, LGA2 sunshielded, 05/05/1998) (cont'd).**

| Link Parameter | Unit | Design Value | Fab Tol | Adv Tol | Mean Value | Var |
|---|---|---|---|---|---|---|
| TRANSMITTER PARAMETERS | | | | | | |
| 1. Total Transmitter Power | dBm | 73.00 | 0.00 | –1.00 | 72.67 | 0.0556 |
| 2. Xmitter Waveguide Loss | dB | –0.25 | 0.05 | –0.05 | –0.25 | 0.0004 |
| 3. DSN Antenna Gain | dBi | 67.07 | 0.20 | –0.20 | 67.07 | 0.0133 |
| 4. Antenna Pointing Loss | dB | –0.10 | 0.10 | –0.10 | –0.10 | 0.0017 |
| 5. EIRP (1+2+3+4) | dBm | 139.38 | 0.80 | –0.80 | 139.38 | 0.0710 |
| PATH PARAMETERS | | | | | | |
| 6. Space Loss | dB | 293.10 | 0.00 | 0.00 | –293.10 | 0.0000 |
| 7. Atmospheric Attenuation | dB | –0.27 | 0.00 | 0.00 | –0.27 | 0.0000 |
| RECEIVER PARAMETERS | | | | | | |
| 8. Polarization Loss | dB | –0.10 | 0.00 | 0.00 | –0.10 | 0.0000 |
| 9. S/C Ant Pnt Control Loss | dB | –0.00 | –0.96 | 0.96 | –0.00 | 0.1017 |
| 10. Degrees-off-boresight (DOFF) Loss | dB | –0.00 | 0.00 | –0.00 | –0.00 | 0.0000 |
| 11. S/C Antenna Gain (at boresight) | dBi | 45.40 | 0.40 | –0.60 | 45.33 | 0.0422 |
| 12. Obscuration Loss | dB | –0.00 | –0.00 | 0.00 | –0.00 | 0.0000 |
| 13. RFS Circuit Loss | dB | –2.00 | 0.40 | –0.30 | –1.95 | 0.0408 |
| 14. Antenna Circuit Loss | dB | –0.20 | 0.10 | –0.10 | –0.20 | 0.0033 |
| TOTAL POWER SUMMARY | | | | | | |
| 15. Tot Rcvd Pwr (5+6+7+8+9+10+11+12+13+14) | dBm | 110.90 | 1.53 | 1.53 | –110.90 | 0.2591 |
| 16. Noise Spectral Density | dBm/Hz | 174.17 | –0.52 | 0.83 | –174.06 | 0.0769 |
| 17. System Noise Temperature | K | 277.58 | –31.16 | 58.43 | 286.67 | 344.76 |
| 18. Received $P_t/N_0$ (15–16) | dB-Hz | 63.16 | 1.74 | –1.74 | 63.16 | 0.3360 |
| CARRIER PERFORMANCE | | | | | | |
| 19. Recovered $P_t/N_0$ (18+[AGC+BPF]) | dB-Hz | 63.16 | 1.74 | –1.74 | 63.16 | 0.3360 |
| 20. Command Carrier Suppression | dB | –4.15 | 0.00 | 0.00 | –4.15 | 0.0000 |
| 21. Ranging Carrier Suppression | dB | –3.00 | 0.00 | 0.00 | –3.00 | 0.0000 |
| 22. Carrier Power (AGC) | dBm | –118.05 | –1.53 | 1.53 | –118.05 | 0.2591 |
| 23. Received $P_c/N_0$ (19+20+21) | dB-Hz | 56.01 | 1.74 | –1.74 | 56.01 | 0.3360 |
| 24. Carrier Loop Noise BW | dB-Hz | 12.43 | –0.71 | 1.00 | 12.58 | 0.2436 |
| 25. Carrier Loop SNR (CNR) (23–24) | dB | 43.44 | 2.28 | –2.28 | 43.44 | 0.5796 |
| 26. Recommended CNR | dB | 12.00 | 0.00 | 0.00 | 12.00 | 0.0000 |
| 27. Carrier Loop SNR Margin (25–26) | dB | 31.44 | 2.28 | –2.28 | 31.44 | 0.5796 |

*(Continued on next page)*

**Table 5-1. Uplink DCT (34-m HEF, LGA2 sunshielded, 05/05/1998) (cont'd).**

| Link Parameter | Unit | Design Value | Fab Tol | Adv Tol | Mean Value | Var |
|---|---|---|---|---|---|---|
| CHANNEL PERFORMANCE | | | | | | |
| 28. Command Data Suppression | dB | –2.64 | 0.00 | 0.00 | –2.64 | 0.0000 |
| 29. Ranging Data Suppression | dB | –3.00 | 0.00 | 0.00 | –3.00 | 0.0000 |
| 30. Received $P_d/N_0$ (19+28+29) | dB-Hz | 57.53 | 1.74 | –1.74 | 57.53 | 0.3360 |
| 31. 3-Sigma $P_d/N_0$ (30-3*sqrt(30var)) | dB-Hz | 55.79 | 0.00 | 0.00 | 55.79 | 0.0000 |
| 32. Data Rate (dB-Hz) | dB-Hz | 26.99 | 0.00 | 0.00 | 26.99 | 0.0000 |
| 33. Spacecraft System Loss | dB | –0.80 | 0.25 | –0.25 | –0.80 | 0.0208 |
| 34. Available $E_b/N_0$ (30–32+33) | dB | 29.74 | 1.79 | –1.79 | 29.74 | 0.3568 |
| 35. Required $E_b/N_0$ | dB | 9.60 | 0.00 | 0.00 | 9.60 | 0.0000 |
| 36. $E_b/N_0$ Margin (34–35) | dB | 20.14 | 1.79 | –1.79 | 20.14 | 0.3568 |
| 37. $E_b/N_0$ Marg Sigma | dB | 0.00 | 0.00 | 0.00 | 0.60 | 0.0000 |
| 38. $E_b/N_0$ Margin-3Sigma (36–3*37) | dB | 0.00 | 0.00 | 0.00 | 18.35 | 0.0000 |
| 39. BER (from 34) | none | 5e–18 | | | | |

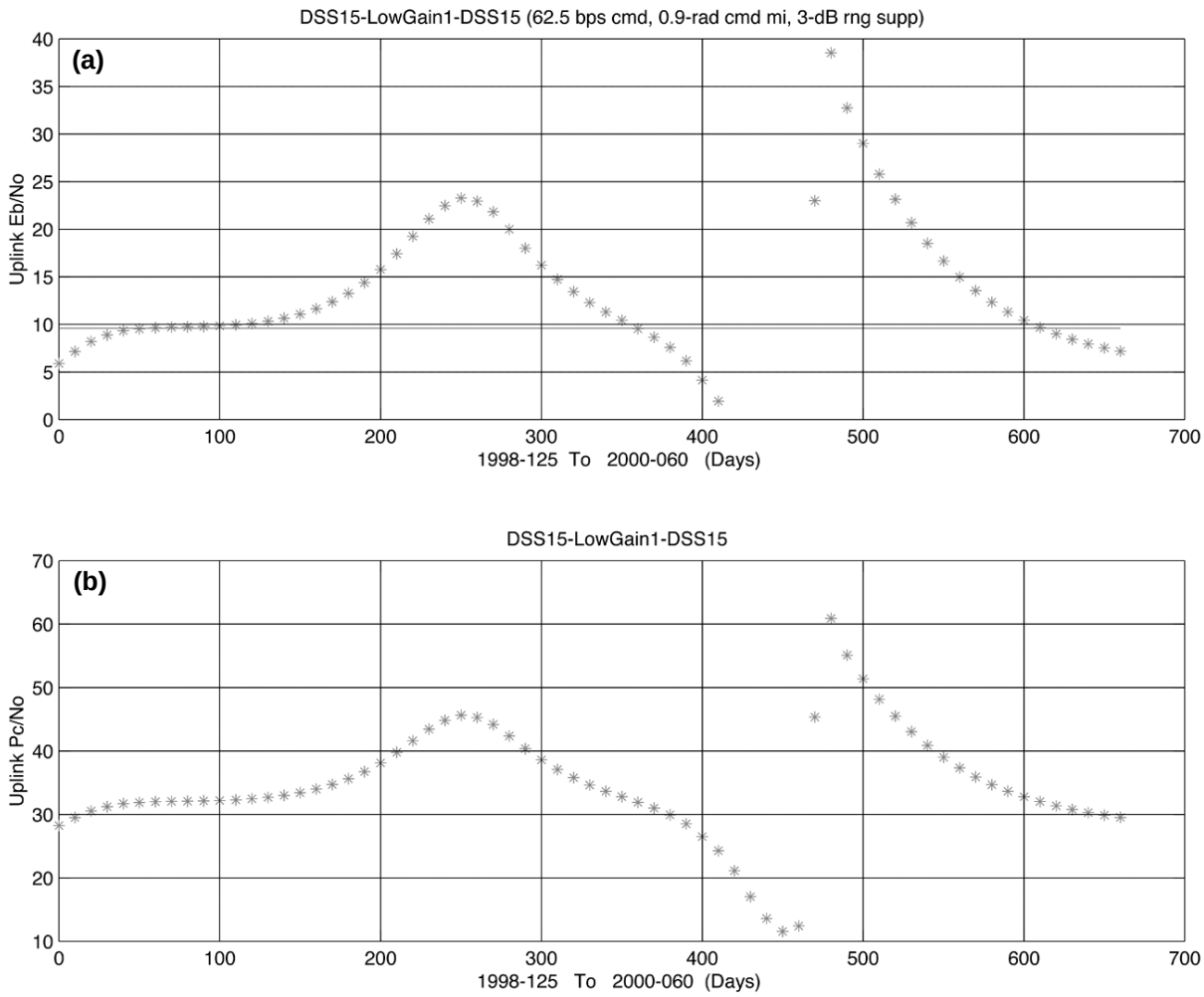


**Fig. 5-1. LGA1 X-band uplink from 34-m HEF station (May 1998–February 2000): (a) command $E_b/N_0$ and (b) $P_c/N_0$.**

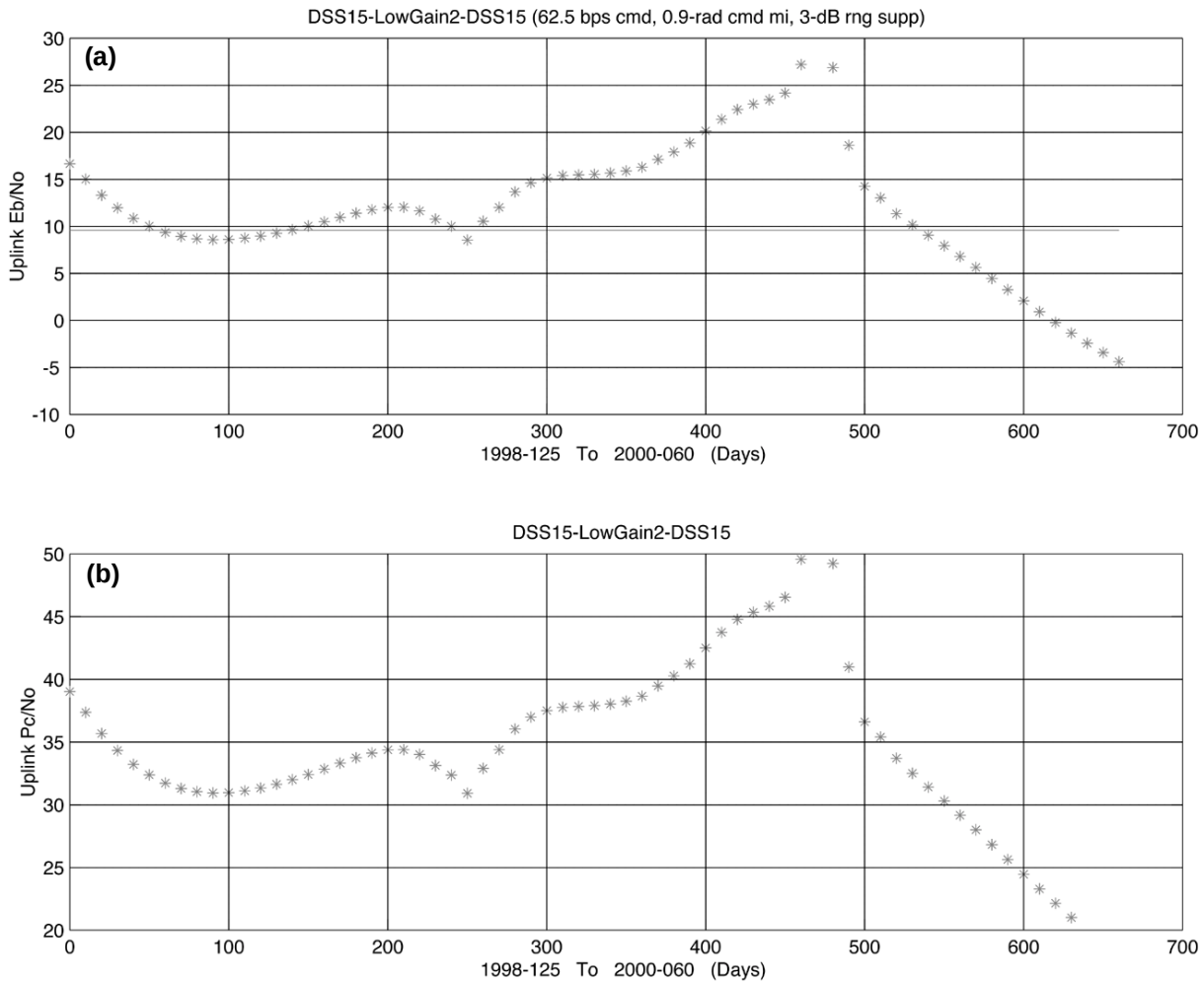


**Fig. 5-2. LGA2 X-band uplink from 34-m HEF station (May 1998–February 2000): (a) command $E_b/N_0$ and (b) $P_c/N_0$.**

**Table 5-2. Downlink DCT (34-m HEF, LGA2 sunshielded, 05/05/1998).**

| | | | | |
|---|---|---|---|---|
| Produced by CAS V1.1 10/04/1999 | | | | |
| Predict | 2004-181T00:00:00000 UTC | | | |
| Up/Down-Link | Two-Way | | | |
| RF Band | X:X | | | |
| Diplex Mode | Bypass Diplex | | | |
| LNA Selection | LNA-1 | | | |
| Telecom Link | DSS-15-HighGain-DSS-15 | | | |
| TELEMETRY DOWN-LINK PARAMETER INPUTS | | | | |
| Encoding | Reed Solomon (255,223) concatenated with C.E. (15,1/6) | | | |
| Carrier Tracking | Residual | | | |
| Oscillator | 2 Way VCO | | | |
| Sub-Carrier Mode | Squarewave | | | |
| PLL Bandwidth | 3.00 Hz | | | |
| Tlm Usage | RTE & Science Playback | | | |
| Tlm Data Rate/Mod Index | 14220 | b/s / 80.14 | Degrees | |
| Tlm Rng/DOR Mod Index | 0.27 | Rads/ Off | Radians | |
| Operations Mode | Nominal | | | |
| Mission Phase | Early Cruise | | | |
| DSN Site | Gold-Gold | | | |
| DSN Elevation | Fixed Val Deg | | | |
| Weather/CD | Historical | | | |
| Attitude Pointing | EarthPointed | | | |
| EXTERNAL DATA | | | | |
| Range | (km) | 1.5021e+09 | | |
| Range | (AU) | 1.0041e+01 | | |
| One-Way Light Time (OWLT) | (hh:mm:ss) | 01:23:30 | | |
| Station Elevation(s) | (deg) | [10.00] | | |
| DOFF: Hga,Lga1,Lga2 | (deg) | 0.00 | 0.00 | 90.00 |
| Clk: Hga,Lga1,Lga2 | (deg) | 141.59 | 141.59 | 0.00 |
| Added S/C Ant Pnt Offset | (deg) | 0 | | |
| DSN Site Considered: | DSS-15/DSS-15 | | | |
| At Time: | 0.00 hours after the start time | | | |

*(Continued on next page)*

**Table 5-2. Downlink DCT (34-m HEF, LGA2 sunshielded, 05/05/1998) (cont'd).**

| Link Parameter | Unit | Design Value | Fab Tol | Adv Tol | Mean Value | Var |
|---|---|---|---|---|---|---|
| TRANSMITTER PARAMETERS | | | | | | |
| 1. S/C Transmitter Power | dBm | 43.00 | 0.37 | –0.48 | 42.96 | 0.0303 |
| 2. S/C Transmitter Loss | dB | –1.10 | 0.20 | –0.40 | –1.20 | 0.0300 |
| 3. S/C Circuit Loss | dB | –0.20 | 0.20 | –0.10 | –0.15 | 0.0075 |
| 4. S/C Antenna Gain | dBi | 47.20 | 0.60 | –0.60 | 47.20 | 0.0600 |
| 5. Degrees-off-boresight (DOFF) Loss | dB | –0.00 | 0.00 | –0.00 | –0.00 | 0.0000 |
| 6. S/C Pointing Control Loss | dB | –0.00 | –1.29 | 1.29 | –0.00 | 0.1846 |
| 7. Obscuration Loss | dB | –0.00 | –0.00 | 0.00 | –0.00 | 0.0000 |
| 8. EIRP (1+2+3+4+5+6+7) | dBm | 88.81 | 1.68 | –1.68 | 88.81 | 0.3124 |
| PATH PARAMETERS | | | | | | |
| 9. Space Loss | dB | –294.50 | 0.00 | 0.00 | –294.50 | 0.0000 |
| 10. Atmospheric Attenuation | dB | –0.27 | 0.00 | 0.00 | –0.27 | 0.0000 |
| RECEIVER PARAMETERS | | | | | | |
| 11. DSN Antenna Gain | dBi | 68.24 | 0.20 | –0.20 | 68.24 | 0.0133 |
| 12. DSN Antenna Pnt Loss | dB | –0.10 | 0.10 | –0.10 | –0.10 | 0.0033 |
| 13. Polarization Loss | dB | –0.05 | 0.10 | –0.10 | –0.05 | 0.0033 |
| TOTAL POWER SUMMARY | | | | | | |
| 14. Tot Rcvd Pwr (8+9+10+11+12+13) | dBm | –137.87 | –1.73 | 1.73 | –137.87 | 0.3324 |
| 15. SNT at Zenith | K | 17.55 | –2.00 | 2.00 | 17.55 | 0.6667 |
| 16. SNT due to Elevation | K | 1.34 | 0.00 | 0.00 | 1.34 | 0.0000 |
| 17. SNT due to Atmosphere | K | 16.99 | 0.00 | 0.00 | 16.99 | 0.0000 |
| 18. SNT due to the Sun | K | 0.00 | 0.00 | 0.00 | 0.00 | 0.0000 |
| 19. SNT due to other Hot Bodies | K | 0.00 | 0.00 | 0.00 | 0.00 | 0.0000 |
| 20. System Noise Temperature (15+16+17+18+19) | K | 35.88 | –2.00 | 2.00 | 35.88 | 0.4444 |
| 21. Noise Spectral Density | dBm/Hz | –183.05 | –0.25 | 0.24 | –183.06 | 0.0065 |
| 22. Received $P_t/N_0$ (14–21) | dB-Hz | 45.19 | 1.75 | –1.75 | 45.19 | 0.3389 |
| CARRIER PERFORMANCE | | | | | | |
| 23. Recovered $P_t/N_0$ (22+[AGC+BPF]) | dB-Hz | 45.19 | 1.75 | –1.75 | 45.19 | 0.3389 |
| 24. Telemetry Carrier Suppression | dB | –15.33 | 1.94 | –2.52 | –15.52 | 0.8333 |
| 25. Ranging Carrier Suppression | dB | –0.16 | 0.03 | –0.04 | –0.16 | 0.0002 |
| 26. DOR Carrier Suppression | dB | 0.00 | 0.00 | 0.00 | 0.00 | 0.0000 |

*(Continued on next page)*

**Table 5-2. Downlink DCT (34-m HEF, LGA2 sunshielded, 05/05/1998) (cont'd).**

| Link Parameter | Unit | Design Value | Fab Tol | Adv Tol | Mean Value | Var |
|---|---|---|---|---|---|---|
| 27. Carrier Power (AGC) (14+24+25+26) | dBm | 153.55 | –3.24 | 3.24 | –153.55 | 1.1659 |
| 28. Received $P_c/N_0$ (23+24+25+26) | dB-Hz | 29.51 | 3.25 | –3.25 | 29.51 | 1.1724 |
| 29. Carrier Loop Noise BW | dB-Hz | 4.77 | 0.00 | 0.00 | 4.77 | 0.0000 |
| 30. Carrier Loop SNR (CNR) (28–29) | dB | 24.74 | 3.25 | –3.25 | 24.74 | 1.1724 |
| 31. Recommended CNR | dB | 10.00 | 0.00 | 0.00 | 10.00 | 0.0000 |
| 32. Carrier Loop SNR Margin (30–31) | dB | 14.74 | 3.25 | –3.25 | 14.74 | 1.1724 |
| TELEMETRY PERFORMANCE | | | | | | |
| 33. Telemetry Data Suppression | dB | –0.13 | 0.06 | –0.07 | –0.13 | 0.0007 |
| 34. Ranging Data Suppression | dB | –0.16 | 0.03 | –0.04 | –0.16 | 0.0002 |
| 35. DOR Data Suppression | dB | 0.00 | 0.00 | 0.00 | 0.00 | 0.0000 |
| 36. Received $P_d/N_0$ (23+33+34+35) | dB-Hz | 44.90 | 1.75 | –1.75 | 44.90 | 0.3399 |
| 37. 2-Sigma $P_d/N_0$ (36–2*sqrt(36var)) | dB-Hz | 43.73 | 0.00 | 0.00 | 43.73 | 0.0000 |
| 38. Data Rate | dB-Hz | 41.53 | 0.00 | 0.00 | 41.53 | 0.0000 |
| 39. DSN System Loss | dB | –0.50 | 0.00 | 0.00 | –0.50 | 0.0000 |
| 40. Available $E_b/N_0$ (36–38+39) | dB | 2.87 | 1.75 | –1.75 | 2.87 | 0.3399 |
| 41. Required $E_b/N_0$ | dB | 0.31 | 0.00 | 0.00 | 0.31 | 0.0000 |
| 42. $E_b/N_0$ Margin (40–41) | dB | 2.56 | 1.75 | –1.75 | 2.56 | 0.3399 |
| 43. $E_b/N_0$ Marg Sigma | dB | 0.00 | 0.00 | 0.00 | 0.58 | 0.0000 |
| 44. $E_b/N_0$ Margin-2Sigma (42–2*43) | dB | 0.00 | 0.00 | 0.00 | 1.39 | 0.0000 |
| 45. BER of Conv Decoder (from 40) | none | 2.0902e–08 | | | | |

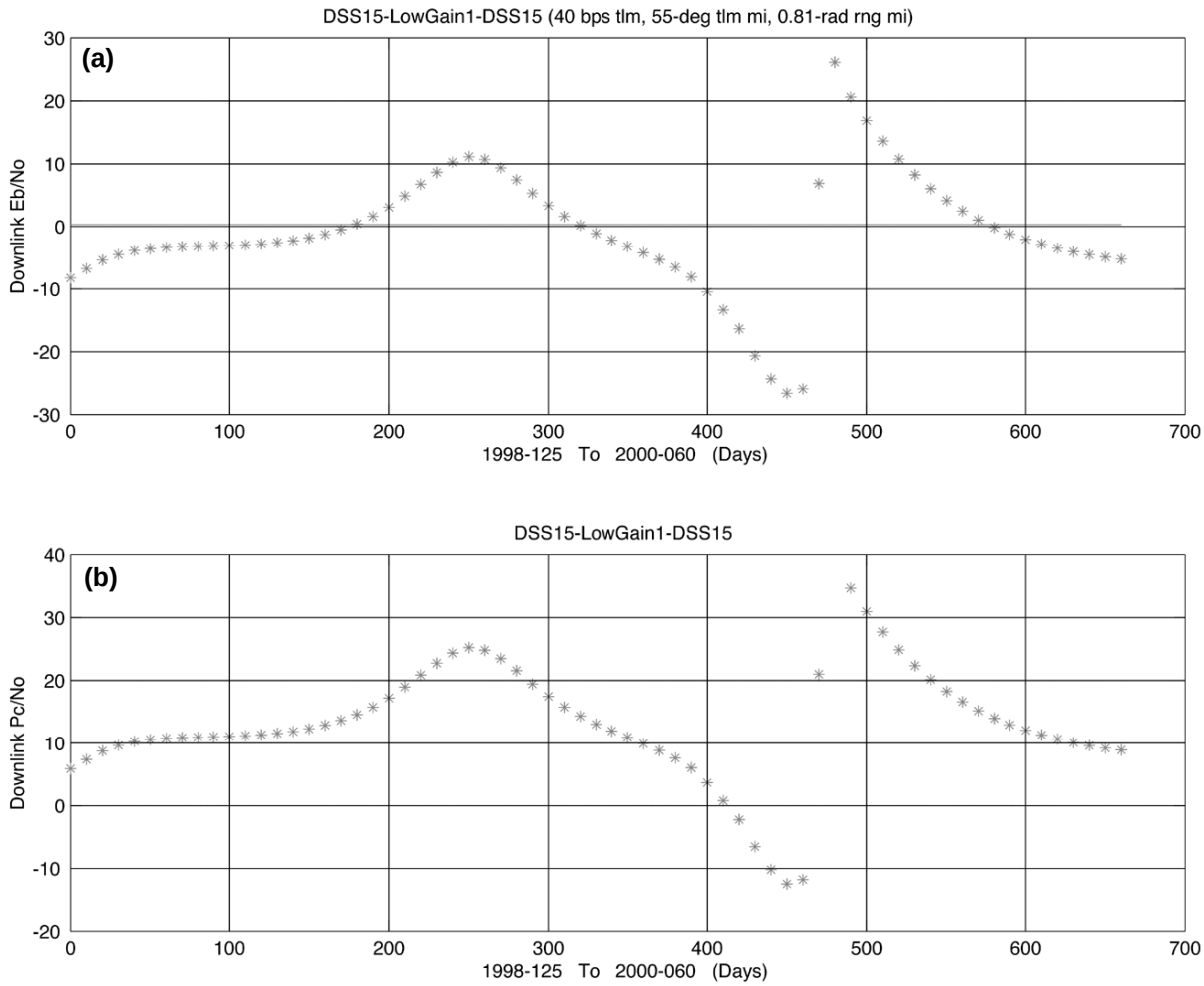


**Fig. 5-3. LGA1 X-band downlink to 34-m DSS (May 1998–February 2000): (a) telemetry $E_b/N_0$ and (b) $P_c/N_0$.**

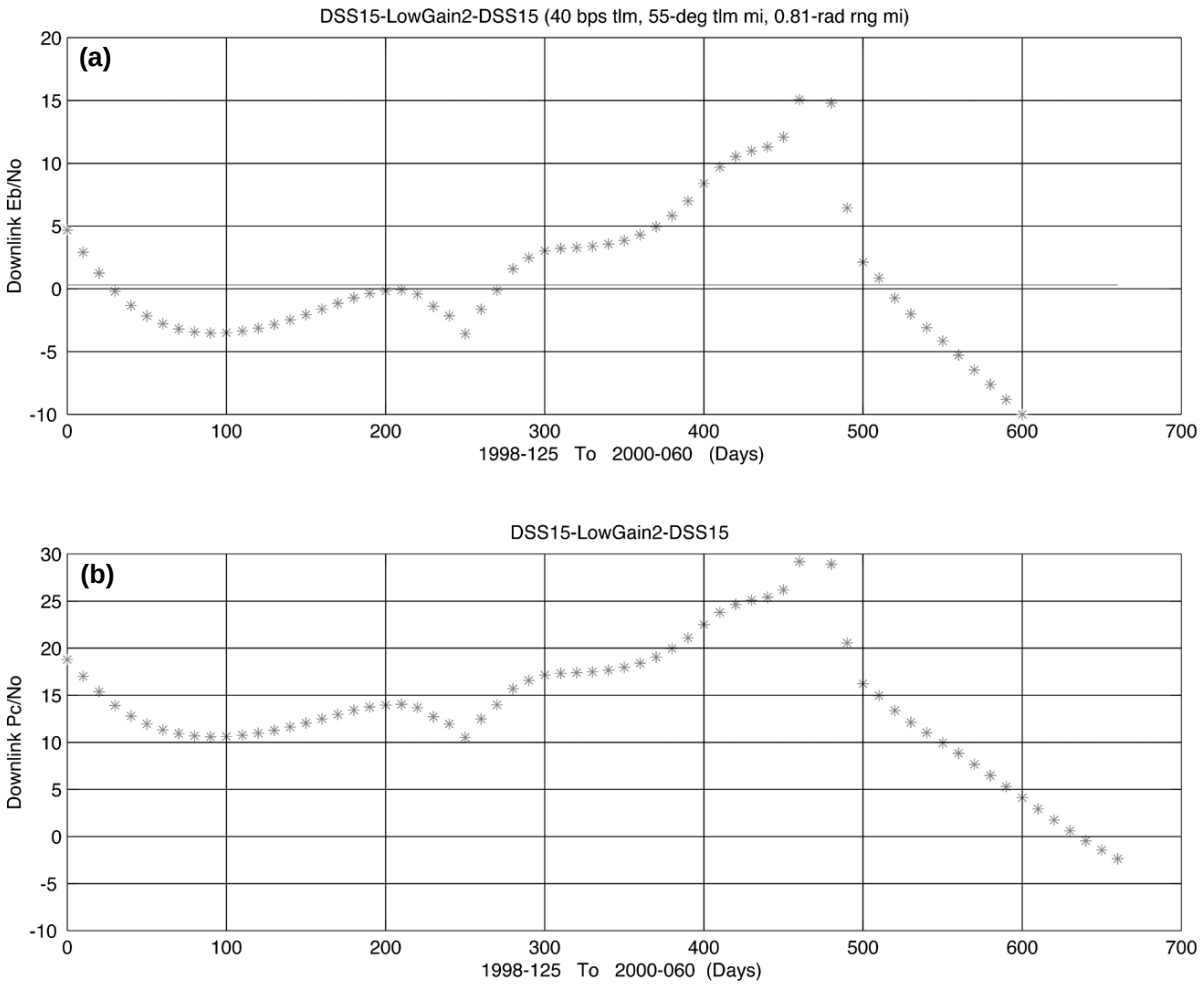


**Fig. 5-4. LGA2 X-band downlink to 34-m DSS (May 1998–February 2000): (a) telemetry $E_b/N_0$ and (b) $P_c/N_0$.**

**Table 5-3. Ranging DCT (34-m HEF, LGA2 sunshielded, 05/05/1998).**

| | | | | |
|---|---|---|---|---|
| Produced by CAS V1.1 10/04/1999 | | | | |
| Predict | 2004-181T00:00:00000 UTC | | | |
| Up/Down-Link | Two-Way | | | |
| RF Band | X:X | | | |
| Diplex Mode | Bypass Diplex | | | |
| LNA Selection | LNA-1 | | | |
| Telecom Link | DSS-15-HighGain-DSS-15 | | | |
| COMMAND UP-LINK PARAMETER INPUTS | | | | |
| Cmd Data Rate | 500.0000 b/s | | | |
| Cmd Mod Index | 1.30 | Radians | | |
| Cmd RngMod Index | 44.9 | Degrees | | |
| TELEMETRY DOWN-LINK PARAMETER INPUTS | | | | |
| Encoding | Reed Solomon (255,223) concatenated with C.E. (15,1/6) | | | |
| Carrier Tracking | Residual | | | |
| Oscillator | 2 Way VCO | | | |
| Sub-Carrier Mode | Squarewave | | | |
| PLL Bandwidth | 3.00 | Hz | | |
| Tlm Usage | RTE & Science Playback | | | |
| Tlm Data Rate/Mod Index | 14220 | b/s / 80.14 | Degrees | |
| Tlm Rng/DOR Mod Index | 0.27 | Rads/ Off | Radians | |
| Operations Mode | Nominal | | | |
| Mission Phase | Early Cruise | | | |
| DSN Site | Gold-Gold | | | |
| DSN Elevation | Fixed Val Deg | | | |
| Weather/CD | Historical | | | |
| Attitude Pointing | EarthPointed | | | |
| EXTERNAL DATA | | | | |
| Range | (km) | 1.5021e+09 | | |
| Range | (AU) | 1.0041e+01 | | |
| One-Way Light Time (OWLT) | (hh:mm:ss) | 01:23:30 | | |
| Station Elevation(s) | (deg) | [10.00] | | |
| DOFF: Hga,Lga1,Lga2 | (deg) | 0.00 | 0.00 | 90.00 |
| Clk: Hga,Lga1,Lga2 | (deg) | 141.59 | 141.59 | 0.00 |
| Added S/C Ant Pnt Offset | (deg) | 0 | | |
| DSN Site Considered: | DSS-15/DSS-15 | | | |
| At Time: | 0.00hours after the start time | | | |

*(Continued on next page)*

**Table 5-3. Ranging DCT (34-m HEF, LGA2 sunshielded, 05/05/1998) (cont'd).**

| Link Parameter | Unit | Design Value | Fab Tol | Adv Tol | Mean Value | Var |
|---|---|---|---|---|---|---|
| UPLINK TURNAROUND RANGING CHANNEL | | | | | | |
| 1. UL Recovered $P_t/N_0$ | dB-Hz | 63.16 | 1.74 | –1.74 | 63.16 | 0.3360 |
| 2. UL Cmd Ranging Suppression | dB | –4.15 | 0.00 | 0.00 | –4.15 | 0.0000 |
| 3. UL Ranging Suppression | dB | –3.03 | 0.00 | 0.00 | –3.03 | 0.0000 |
| 4. UL $P_r/P_t$ (2+3) | dB | –7.18 | –0.00 | 0.00 | –7.18 | 0.0000 |
| 5. UL Filtering Los | dB | –0.91 | 0.20 | –0.20 | –0.91 | 0.0067 |
| 6. UL Output $P_r/N_0$ (1+4+5) | dB-Hz | 55.07 | 1.76 | –1.76 | 55.07 | 0.3427 |
| 7. Ranging channel noise BW | dB-Hz | 61.76 | 0.00 | 0.00 | 61.76 | 0.0000 |
| 8. UL Ranging SNR (6–7) | dB | –6.69 | –1.76 | 1.76 | –6.69 | 0.3427 |
| DOWNLINK RANGING CHANNEL | | | | | | |
| 9. DL Recovered $P_t/N_0$ | dB-Hz | 45.19 | 2.48 | –2.48 | 45.19 | 0.6816 |
| 10. DL Tlm Ranging Suppression | dB | –15.33 | 1.94 | –2.52 | –15.52 | 0.8333 |
| 11. DL Ranging Suppression | dB | –22.19 | 0.85 | –0.97 | –22.23 | 0.1376 |
| 12. DL $P_r/P_t$ (10+11) | dB | –37.75 | –2.96 | 2.96 | –37.75 | 0.9709 |
| 13. DL Received $P_r/N_0$ (9+12) | dB-Hz | 7.44 | 3.86 | –3.86 | 7.44 | 1.6525 |
| 14. DL Noisy Ref Loss | dB | 0.00 | 0.00 | 0.00 | 0.00 | 0.0000 |
| 15. DL Output $P_r/N_0$ (13+14) | dB-Hz | 7.44 | 3.86 | –3.86 | 7.44 | 1.6525 |
| 16. DL Out $P_r/N_0$ Sigma | dB-Hz | 0.00 | 0.00 | 0.00 | 1.29 | 0.0000 |
| 17. DL Out $P_r/N_0$ Mean-2Sigma | dB-Hz | 4.87 | 0.00 | 0.00 | 4.87 | 0.0000 |
| 18. DL Required $P_r/N_0$ | dB-Hz | –8.50 | 0.00 | 0.00 | –8.50 | 0.0000 |
| 19. Ranging Margin, Mean (15–18) | dB-Hz | 15.94 | 3.86 | –3.86 | 15.94 | 1.6525 |
| 20. Ranging Margin, Mean-2Sigma (17–18) | dB-Hz | 13.37 | 0.00 | –0.00 | 13.37 | 0.0000 |

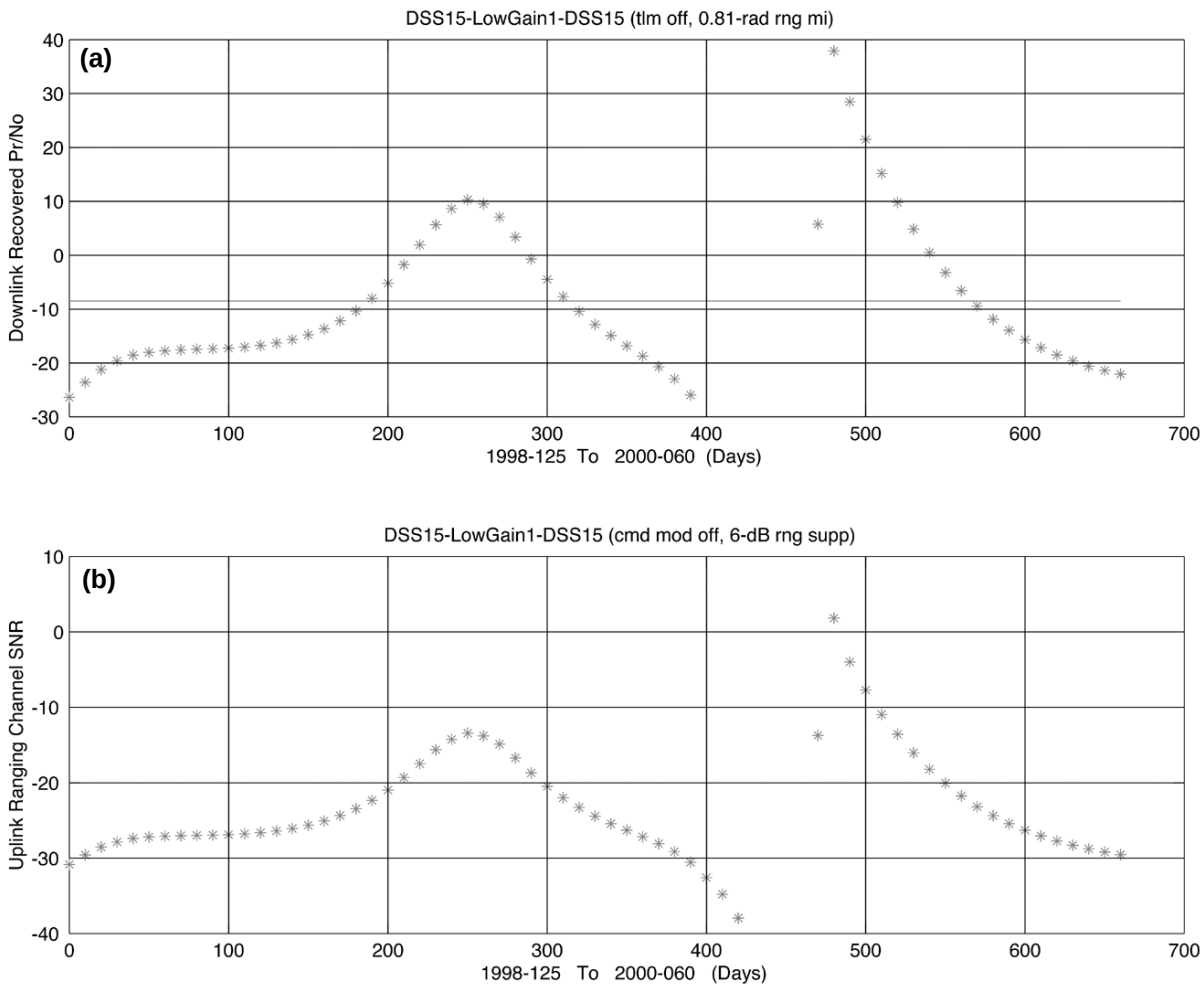


**Fig. 5-5. LGA1 X-band ranging, 34-m HEF UL and DL (May 1998–February 2000): (a) downlink ranging $P_r/N_0$ and (b) uplink ranging signal-to-noise ratio.**

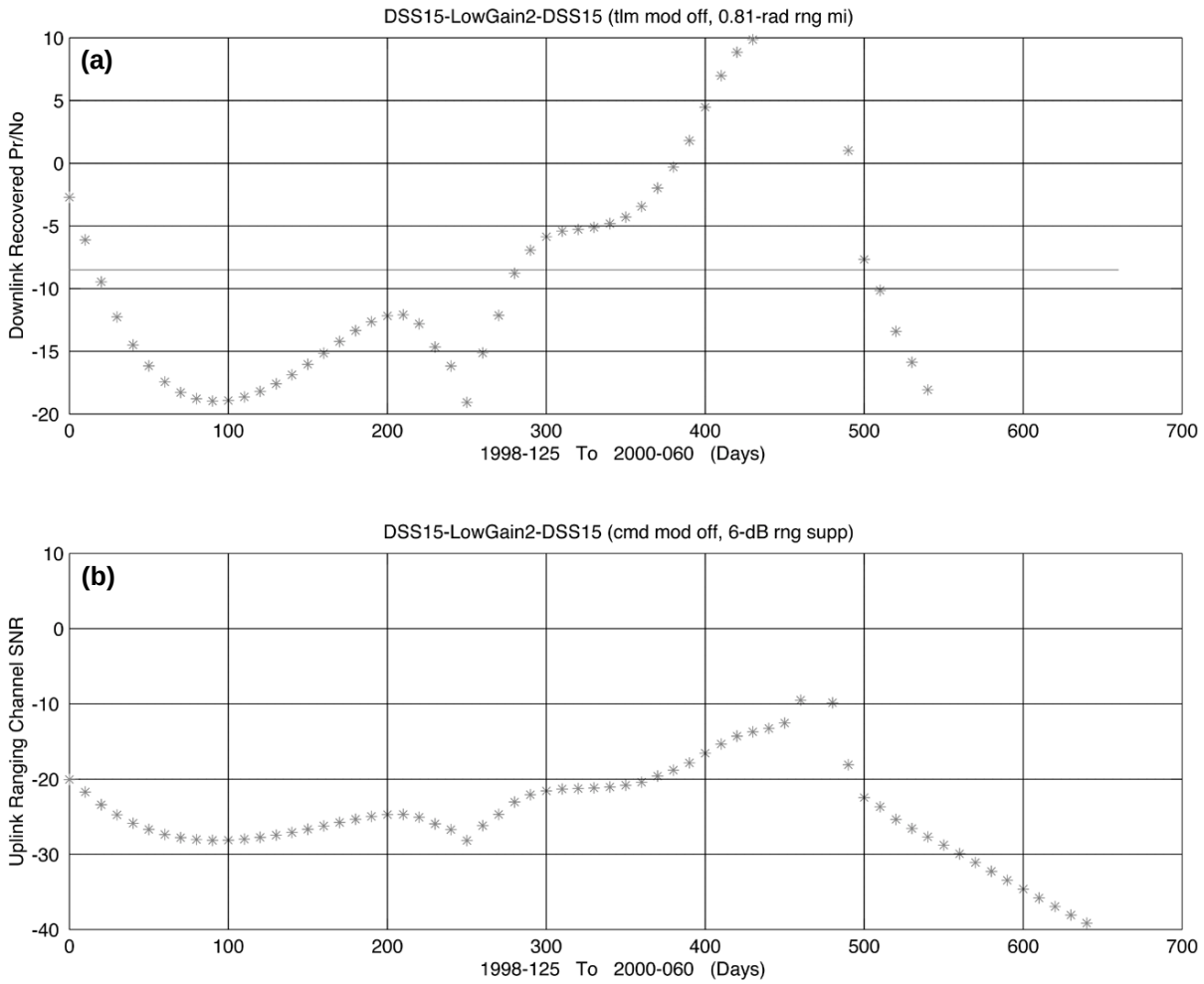


**Fig. 5-6. LGA2 X-band ranging, 34-m HEF UL and DL (May 1998–February 2000): (a) downlink ranging $P_r/N_0$ and (b) uplink ranging signal-to-noise ratio.**

**Table 5-4. Uplink DCT (34-m HEF, HGA, 07/01/2004).**

| | | | | |
|---|---|---|---|---|
| Produced by CAS V1.1 10/04/1999 | | | | |
| Predict | 2004-181T00:00:00.000 UTC | | | |
| Up/Down-Link | Two-Way | | | |
| RF Band | X:X | | | |
| Telecom Link | DSS-15-HighGain.ConfigA-DSS-15 | | | |
| COMMAND UP-LINK PARAMETER INPUTS | | | | |
| Cmd Data Rate | 500.0000 b/s | | | |
| Cmd Mod Index | 1.30 | Radians | | |
| Cmd RngMod Index | 44.9 | Degrees | | |
| Operations Mode | Nominal | | | |
| Mission Phase | Early Cruise | | | |
| DSN Site | Gold-Gold | | | |
| DSN Elevation | Fixed Value | | | |
| Weather/CD | 99 | | | |
| Attitude Pointing | EarthPointed | | | |
| EXTERNAL DATA | | | | |
| Range | (km) | 1.5021e+09 | | |
| Range | (AU) | 1.0041e+01 | | |
| One-Way Light Time (OWLT) | (hh:mm:ss) | 01:23:30 | | |
| Station Elevation(s) | (deg) | [10.00] | | |
| DOFF: Hga,Lga1,Lga2 | (deg) | 0.00 | 0.00 | 90.00 |
| Clk: Hga,Lga1,Lga2 | (deg) | 141.59 | 141.59 | 0.00 |
| Added S/C Ant Pnt Offset | (deg) | 0 | | |
| DSN Site Considered: | DSS-15/DSS-15 | | | |
| At Time: | 0.00 | hours after the start time | | |

*(Continued on next page)*

**Table 5-4. Uplink DCT (34-m HEF, HGA, 07/01/2004) (cont'd).**

| Link Parameter | Unit | Design Value | Fab Tol | Adv Tol | Mean Value | Var |
|---|---|---|---|---|---|---|
| TRANSMITTER PARAMETERS | | | | | | |
| 1. Total Transmitter Power | dBm | 73.00 | 0.00 | –1.00 | 72.67 | 0.0556 |
| 2. Xmitter Waveguide Loss | dB | –0.25 | 0.05 | –0.05 | –0.25 | 0.0004 |
| 3. DSN Antenna Gain | dBi | 67.07 | 0.20 | –0.20 | 67.07 | 0.0133 |
| 4. Antenna Pointing Loss | dB | –0.10 | 0.10 | –0.10 | –0.10 | 0.0017 |
| 5. EIRP (1+2+3+4) | dBm | 139.38 | 0.80 | –0.80 | 139.38 | 0.0710 |
| PATH PARAMETERS | | | | | | |
| 6. Space Loss | dB | –293.10 | 0.00 | 0.00 | –293.10 | 0.0000 |
| 7. Atmospheric Attenuation | dB | –0.35 | 0.00 | 0.00 | –0.35 | 0.0000 |
| RECEIVER PARAMETERS | | | | | | |
| 8. Polarization Loss | dB | –0.06 | 0.00 | 0.00 | –0.06 | 0.0000 |
| 9. S/C Ant Pnt Control Loss | dB | –0.00 | –0.96 | 0.96 | –0.00 | 0.1017 |
| 10. Degrees-off-boresight (DOFF) Loss | dB | –0.00 | –0.00 | –0.00 | –0.00 | 0.0000 |
| 11. S/C Antenna Gain (at boresight) | dBi | 45.40 | 0.40 | –0.60 | 45.33 | 0.0422 |
| 12. Obscuration Loss | dB | –0.00 | –0.00 | 0.00 | –0.00 | 0.0000 |
| 13. RFS Circuit Loss | dB | –2.00 | 0.40 | –0.30 | –1.95 | 0.0408 |
| 14. Antenna Circuit Loss | dB | –0.20 | 0.10 | –0.10 | –0.20 | 0.0033 |
| TOTAL POWER SUMMARY | | | | | | |
| 15. Tot Rcvd Pwr (5+6+7+8+9+10+11+12+13+14) | dBm | 110.94 | –1.53 | 1.53 | –110.94 | 0.2591 |
| 16. Noise Spectral Density | dBm/Hz | –174.17 | –0.52 | 0.83 | –174.06 | 0.0769 |
| 17. System Noise Temperature | K | 277.58 | –31.16 | 58.43 | 286.67 | 344.76 |
| 18. Received $P_t/N_0$ (15–16) | dB-Hz | 63.12 | 1.74 | –1.74 | 63.12 | 0.3360 |
| CARRIER PERFORMANCE | | | | | | |
| 19. Recovered $P_t/N_0$ (18+[AGC+BPF]) | dB-Hz | 63.12 | 1.74 | –1.74 | 63.12 | 0.3360 |
| 20. Command Carrier Suppression | dB | –4.15 | 0.00 | 0.00 | –4.15 | 0.0000 |
| 21. Ranging Carrier Suppression | dB | –3.00 | 0.00 | 0.00 | –3.00 | 0.0000 |
| 22. Carrier Power (AGC) | dBm | –118.08 | –1.53 | 1.53 | –118.08 | 0.2591 |
| 23. Received $P_c/N_0$ (19+20+21) | dB-Hz | 55.98 | 1.74 | –1.74 | 55.98 | 0.3360 |
| 24. Carrier Loop Noise BW | dB-Hz | 12.43 | –0.71 | 1.00 | 12.58 | 0.2436 |
| 25. Carrier Loop SNR (CNR) (23–24) | dB | 43.40 | 2.28 | –2.28 | 43.40 | 0.5796 |
| 26. Recommended CNR | dB | 12.00 | 0.00 | 0.00 | 12.00 | 0.0000 |
| 27. Carrier Loop SNR Margin (25–26) | dB | 31.40 | 2.28 | –2.28 | 31.40 | 0.5796 |

*(Continued on next page)*

**Table 5-4. Uplink DCT (34-m HEF, HGA, 07/01/2004) (cont'd).**

| Link Parameter | Unit | Design Value | Fab Tol | Adv Tol | Mean Value | Var |
|---|---|---|---|---|---|---|
| CHANNEL PERFORMANCE | | | | | | |
| 28. Command Data Suppression | dB | –2.64 | 0.00 | 0.00 | –2.64 | 0.0000 |
| 29. Ranging Data Suppression | dB | –3.00 | 0.00 | 0.00 | –3.00 | 0.0000 |
| 30. Spacecraft System Loss | dB | –0.80 | 0.25 | –0.25 | –0.80 | 0.0208 |
| 31. Received $P_d/N_0$ (19+28+29+30) | dB-Hz | 56.69 | 1.79 | –1.79 | 56.69 | 0.3568 |
| 32. 3-Sigma $P_d/N_0$ (31–3*sqrt(31var)) | dB-Hz | 54.90 | 0.00 | 0.00 | 54.90 | 0.0000 |
| 33. Data Rate (dB-Hz) | dB-Hz | 26.99 | 0.00 | 0.00 | 26.99 | 0.0000 |
| 34. Available $E_b/N_0$ (31–33) | dB | 29.70 | 1.79 | –1.79 | 29.70 | 0.3568 |
| 35. Required $E_b/N_0$ | dB | 9.60 | 0.00 | 0.00 | 9.60 | 0.0000 |
| 36. $E_b/N_0$ Margin (34–35) | dB | 20.10 | 1.79 | –1.79 | 20.10 | 0.3568 |
| 37. $E_b/N_0$ Marg Sigma | dB | 0.00 | 0.00 | 0.00 | 0.60 | 0.0000 |
| 38. $E_b/N_0$ Margin-3Sigma (36–3*37) | dB | 0.00 | 0.00 | 0.00 | 18.31 | 0.0000 |
| 39. BER (from 34) | none | 5e–18 | | | | |

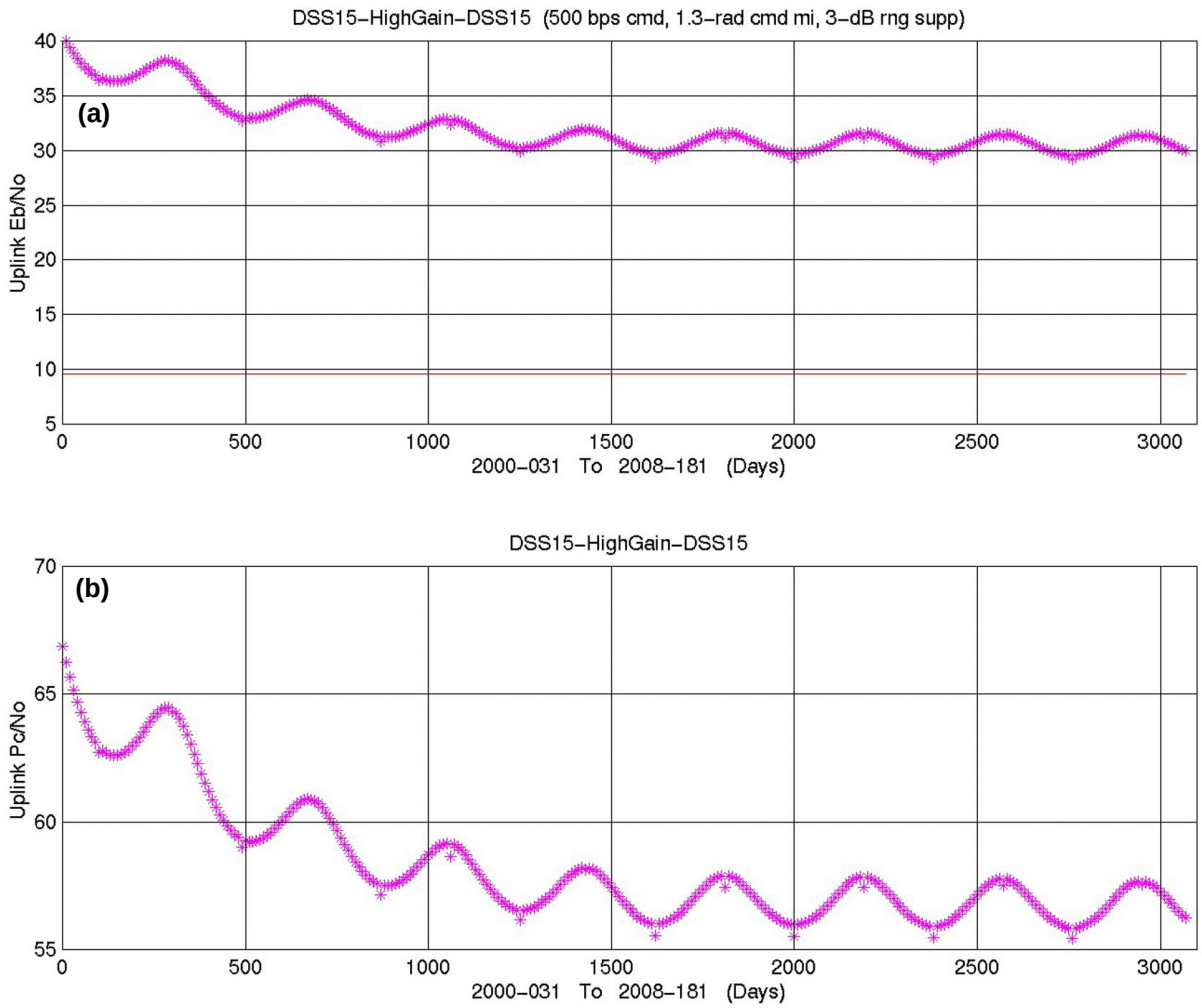


**Fig. 5-7. HGA X-band uplink with 34-m HEF station (February 2000–July 2008): (a) command $E_b/N_0$ and (b) $P_c/N_0$.**

**Table 5-5. Downlink DCT (34-m HEF, HGA, 07/01/2004).**

| | | | | |
|---|---|---|---|---|
| Produced by CAS V1.1 10/04/1999 | | | | |
| Predict | 2004-181T00:00:00000 UTC | | | |
| Up/Down-Link | Two-Way | | | |
| RF Band | X:X | | | |
| Diplex Mode | Bypass Diplex | | | |
| LNA Selection | LNA-1 | | | |
| Telecom Link | DSS-15-HighGain.ConfigA-DSS-15 | | | |
| TELEMETRY DOWN-LINK PARAMETER INPUTS | | | | |
| Encoding | Reed Solomon (255,223) concatenated with C.E. (15,1/6) | | | |
| Carrier Tracking | Residual | | | |
| Oscillator | 2 Way VCO | | | |
| Sub-Carrier Mode | Squarewave | | | |
| PLL Bandwidth | 3.00 | Hz | | |
| Tlm Usage | RTE&SPB_14220 | | | |
| Tlm Data Rate/Mod Index | 14220 | b/s / 80.14 | Degrees | |
| Tlm Rng/DOR Mod Index | 0.27 | Rads/Off | Radians | |
| Operations Mode | Nominal | | | |
| Mission Phase | Early Cruise | | | |
| DSN Site | Gold-Gold | | | |
| DSN Elevation | Fixed Value | | | |
| Weather/CD | 99 | | | |
| Attitude Pointing | EarthPointed | | | |
| EXTERNAL DATA | | | | |
| Range | (km) | 1.5021e+09 | | |
| Range | (AU) | 1.0041e+01 | | |
| One-Way Light Time (OWLT) | (hh:mm:ss) | 01:23:30 | | |
| Station Elevation(s) | (deg) | [10.00] | | |
| DOFF: Hga,Lga1,Lga2 | (deg) | 0.00 | 0.00 | 90.00 |
| Clk: Hga,Lga1,Lga2 | (deg) | 41.59 | 141.59 | 0.00 |
| Added S/C Ant Pnt Offset | (deg) | 0 | | |
| DSN Site Considered: | DSS-15/DSS-15 | | | |
| At Time: | 0.00 | hours after the start time | | |

*(Continued on next page)*

**Table 5-5. Downlink DCT (34-m HEF, HGA, 07/01/2004) (cont'd).**

| Link Parameter | Unit | Design Value | Fab Tol | Adv Tol | Mean Value | Var |
|---|---|---|---|---|---|---|
| TRANSMITTER PARAMETERS | | | | | | |
| 1. S/C Transmitter Power | dBm | 43.00 | 0.37 | –0.48 | 42.96 | 0.0303 |
| 2. S/C Transmitter Loss | dB | –1.10 | 0.20 | –0.40 | –1.20 | 0.0300 |
| 3. S/C Circuit Loss | dB | –0.20 | 0.20 | –0.10 | –0.15 | 0.0075 |
| 4. S/C Antenna Gain | dBi | 47.20 | 0.60 | –0.60 | 47.20 | 0.0600 |
| 5. Degrees-off-boresight (DOFF) Loss | dB | –0.00 | –0.00 | –0.00 | –0.00 | 0.0000 |
| 6. S/C Pointing Control Loss | dB | –0.00 | –1.29 | 1.29 | –0.00 | 0.1846 |
| 7. Obscuration Loss | dB | –0.00 | –0.00 | 0.00 | –0.00 | 0.0000 |
| 8. EIRP (1+2+3+4+5+6+7) | dBm | 88.81 | 1.68 | –1.68 | 88.81 | 0.3124 |
| PATH PARAMETERS | | | | | | |
| 9. Space Loss | dB | –294.50 | 0.00 | 0.00 | –294.50 | 0.0000 |
| 10. Atmospheric Attenuation | dB | –0.35 | 0.00 | 0.00 | –0.35 | 0.0000 |
| RECEIVER PARAMETERS | | | | | | |
| 11. DSN Antenna Gain | dBi | 68.24 | 0.20 | –0.20 | 68.24 | 0.0133 |
| 12. DSN Antenna Pnt Loss | dB | –0.10 | 0.10 | –0.10 | –0.10 | 0.0033 |
| 13. Polarization Loss | dB | –0.08 | 0.10 | –0.10 | –0.08 | 0.0033 |
| TOTAL POWER SUMMARY | | | | | | |
| 14. Tot Rcvd Pwr (8+9+10+11+12+13) | dBm | 137.97 | –1.73 | 1.73 | –137.97 | 0.3324 |
| 15. SNT at Zenith | K | 17.55 | –2.00 | 2.00 | 17.55 | 0.6667 |
| 16. SNT due to Elevation | K | 1.34 | 0.00 | 0.00 | 1.34 | 0.0000 |
| 17. SNT due to Atmosphere | K | 21.61 | 0.00 | 0.00 | 21.61 | 0.0000 |
| 18. SNT due to the Sun | K | 0.00 | 0.00 | 0.00 | 0.00 | 0.0000 |
| 19. SNT due to other Hot Bodies | K | 0.00 | 0.00 | 0.00 | 0.00 | 0.0000 |
| 20. System Noise Temperature (15+16+17+18+19) | K | 40.50 | –2.00 | 2.00 | 40.50 | 0.4444 |
| 21. Noise Spectral Density | dBm/Hz | –182.52 | –0.22 | 0.21 | –182.53 | 0.0051 |
| 22. Received $P_t/N_0$ (14–21) | dB-Hz | 44.56 | 1.74 | –1.74 | 44.56 | 0.3375 |
| CARRIER PERFORMANCE | | | | | | |
| 23. Recovered $P_t/N_0$ (22+[AGC+BPF]) | dB-Hz | 44.56 | 1.74 | –1.74 | 44.56 | 0.3375 |
| 24. Telemetry Carrier Suppression | dB | 15.33 | 1.94 | –2.52 | –15.52 | 0.8333 |
| 25. Ranging Carrier Suppression | dB | –0.16 | 0.03 | –0.04 | –0.16 | 0.0002 |
| 26. DOR Carrier Suppression | dB | 0.00 | 0.00 | 0.00 | 0.00 | 0.0000 |

*(Continued on next page)*

**Table 5-5. Downlink DCT (34-m HEF, HGA, 07/01/2004) (cont'd).**

| Link Parameter | Unit | Design Value | Fab Tol | Adv Tol | Mean Value | Var |
|---|---|---|---|---|---|---|
| 27. Carrier Power (AGC) (14+24+25+26) | dBm | 153.65 | –3.24 | 3.24 | –153.65 | 1.1659 |
| 28. Received $P_c/N_0$ (23+24+25+26) | dB-Hz | 28.88 | 3.25 | –3.25 | 28.88 | 1.1710 |
| 29. Carrier Loop Noise BW | dB-Hz | 4.77 | 0.00 | 0.00 | 4.77 | 0.0000 |
| 30. Carrier Loop SNR (CNR) (28–29) | dB | 24.11 | 3.25 | –3.25 | 24.11 | 1.1710 |
| 31. Recommended CNR | dB | 10.00 | 0.00 | 0.00 | 10.00 | 0.0000 |
| 32. Carrier Loop SNR Margin (30–31) | dB | 14.11 | 3.25 | –3.25 | 14.11 | 1.1710 |
| TELEMETRY PERFORMANCE | | | | | | |
| 33. Telemetry Data Suppression | dB | –0.13 | 0.06 | –0.07 | –0.13 | 0.0007 |
| 34. Ranging Data Suppression | dB | –0.16 | 0.03 | –0.04 | –0.16 | 0.0002 |
| 35. DOR Data Suppression | dB | 0.00 | 0.00 | 0.00 | 0.00 | 0.0000 |
| 36. DSN System Loss | dB | –0.80 | 0.00 | 0.00 | –0.80 | 0.0000 |
| 37. Received $P_d/N_0$ (23+33+34+35+36) | dB-Hz | 43.47 | 1.75 | –1.75 | 43.47 | 0.3385 |
| 38. 2-Sigma $P_d/N_0$ (37–2*sqrt(37var)) | dB-Hz | 42.30 | 0.00 | 0.00 | 42.30 | 0.0000 |
| 39. Data Rat | dB-Hz | 41.53 | 0.00 | 0.00 | 41.53 | 0.0000 |
| 40. Available $E_b/N_0$ (37–39) | dB | 1.94 | 1.75 | –1.75 | 1.94 | 0.3385 |
| 41. Required $E_b/N_0$ | dB | 0.31 | 0.00 | 0.00 | 0.31 | 0.0000 |
| 42. $E_b/N_0$ Margin (40–41) | dB | 1.63 | 1.75 | –1.75 | 1.63 | 0.3385 |
| 43. $E_b/N_0$ Marg Sigma | dB | 0.00 | 0.00 | 0.00 | 0.58 | 0.0000 |
| 44. $E_b/N_0$ Margin-2Sigma (42–2*43) | dB | 0.00 | 0.00 | 0.00 | 0.46 | 0.0000 |
| 45. BER of Conv Decoder (from 40) | none | 4.9037e–06 | | | | |

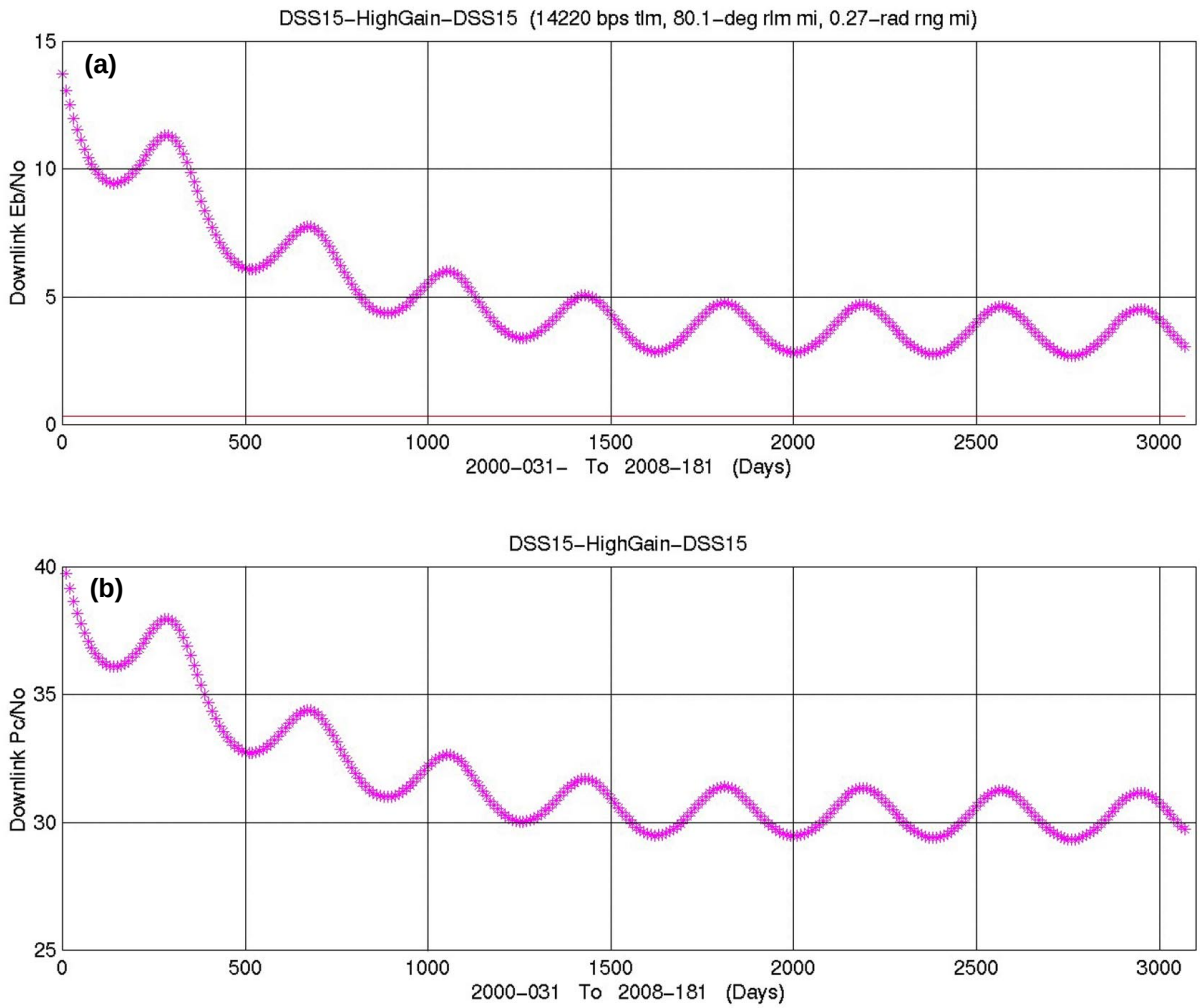


**Fig. 5-8. HGA X-band downlink to 34-m HEF station (February 2000–July 2008): (a) telemetry $E_b/N_0$ and (b) $P_c/N_0$.**

**Table 5-6. Ranging DCT (34-m HEF, HGA, 07/01/2004).**

| | | | | |
|---|---|---|---|---|
| Produced by CAS V1.1 10/04/1999 | | | | |
| Predict | 2004-181T00:00:00000 UTC | | | |
| Up/Down-Link | Two-Way | | | |
| RF Band | X:X | | | |
| Diplex Mode | Bypass Diplex | | | |
| LNA Selection | LNA-1 | | | |
| Telecom Link | DSS-15-HighGain.ConfigA-DSS-15 | | | |
| COMMAND UP-LINK PARAMETER INPUTS | | | | |
| Cmd Data Rate | 500.0000 b/s | | | |
| Cmd Mod Index | 1.30 | Radians | | |
| Cmd RngMod Index | 44.9 | Degrees | | |
| TELEMETRY DOWN-LINK PARAMETER INPUTS | | | | |
| Encoding | Reed Solomon (255,223) concatenated with C.E. (15,1/6) | | | |
| Carrier Tracking | Residual | | | |
| Oscillator | 2 Way VCO | | | |
| Sub-Carrier Mode | Squarewave | | | |
| PLL Bandwidth | 3.00 Hz | | | |
| Tlm Usage | RTE&SPB_14220 | | | |
| Tlm Data Rate/Mod Index | 14220 | b/s / 80.14 | Degrees | |
| Tlm Rng/DOR Mod Index | 0.27 | Rads/ Off | Radians | |
| Operations Mode | Nominal | | | |
| Mission Phase | Early Cruise | | | |
| DSN Site | Gold-Gold | | | |
| DSN Elevation | Fixed Value | | | |
| Weather/CD | 99 | | | |
| Attitude Pointing | EarthPointed | | | |
| EXTERNAL DATA | | | | |
| Range | (km) | 1.5021e+09 | | |
| Range | (AU) | 1.0041e+01 | | |
| One-Way Light Time (OWLT) | (hh:mm:ss) | 01:23:30 | | |
| Station Elevation(s) | (deg) | [10.00] | | |
| DOFF: Hga,Lga1,Lga2 | (deg) | 0.00 | 0.00 | 90.00 |
| Clk: Hga,Lga1,Lga2 | (deg) | 141.59 | 141.59 | 0.00 |
| Added S/C Ant Pnt Offset | (deg) | 0 | | |
| DSN Site Considered: | DSS-15/DSS-15 | | | |
| At Time: | 0.00 | hours after the start time | | |

*(Continued on next page)*

**Table 5-6. Ranging DCT (34-m HEF, HGA, 07/01/2004) (cont'd).**

| Link Parameter | Unit | Design Value | Fab Tol | Adv Tol | Mean Value | Var |
|---|---|---|---|---|---|---|
| UPLINK TURNAROUND RANGING CHANNEL | | | | | | |
| 1. UL Recovered $P_t/N_0$ | dB-Hz | 63.12 | 1.74 | –1.74 | 63.12 | 0.3360 |
| 2. UL Cmd Ranging Suppression | dB | –4.15 | 0.00 | 0.00 | –4.15 | 0.0000 |
| 3. UL Ranging Suppression | dB | –3.03 | 0.00 | 0.00 | –3.03 | 0.0000 |
| 4. UL $P_r/P_t$ (2+3) | dB | –7.18 | –0.00 | 0.00 | –7.18 | 0.0000 |
| 5. UL Filtering Loss | dB | –0.91 | 0.20 | –0.20 | –0.91 | 0.0067 |
| 6. UL Output $P_r/N_0$ (1+4+5) | dB-Hz | 55.04 | 1.76 | –1.76 | 55.04 | 0.3427 |
| 7. Ranging channel noise BW | dB-Hz | 61.76 | 0.00 | 0.00 | 61.76 | 0.0000 |
| 8. UL Ranging SNR (6–7) | dB | –6.72 | –1.76 | 1.76 | –6.72 | 0.3427 |
| DOWNLINK RANGING CHANNEL | | | | | | |
| 9. DL Recovered $P_t/N_0$ | dB-Hz | 44.56 | 2.47 | –2.47 | 44.56 | 0.6802 |
| 10. DL Tlm Ranging Suppression | dB | –15.33 | 1.94 | –2.52 | –15.52 | 0.8333 |
| 11. DL Ranging Suppression | dB | –22.22 | 0.85 | –0.97 | –22.26 | 0.1376 |
| 12. DL $P_r/P_t$ (10+11) | dB | –37.78 | –2.96 | 2.96 | –37.78 | 0.9708 |
| 13. DL Received $P_r/N_0$ (9+12) | dB-Hz | 6.78 | 3.85 | –3.85 | 6.78 | 1.6510 |
| 14. DL Noisy Ref Loss | dB | 0.00 | 0.00 | 0.00 | 0.00 | 0.0000 |
| 15. DL Output $P_r/N_0$ (13+14) | dB-Hz | 6.78 | 3.85 | –3.85 | 6.78 | 1.6510 |
| 16. DL Out $P_r/N_0$ Sigma | dB-Hz | 0.00 | 0.00 | 0.00 | 1.28 | 0.0000 |
| 17. DL Out $P_r/N_0$ Mean-2Sigma | dB-Hz | 4.21 | 0.00 | 0.00 | 4.21 | 0.0000 |
| 18. DL Required $P_r/N_0$ | dB-Hz | –8.50 | 0.00 | 0.00 | –8.50 | 0.0000 |
| 19. Ranging Margin, Mean (15–18) | dB-Hz | 15.28 | 3.85 | –3.85 | 15.28 | 1.6510 |
| 20. Ranging Margin, Mean-2Sigma (17–18) | dB-Hz | 12.71 | 0.00 | –0.00 | 12.71 | 0.0000 |

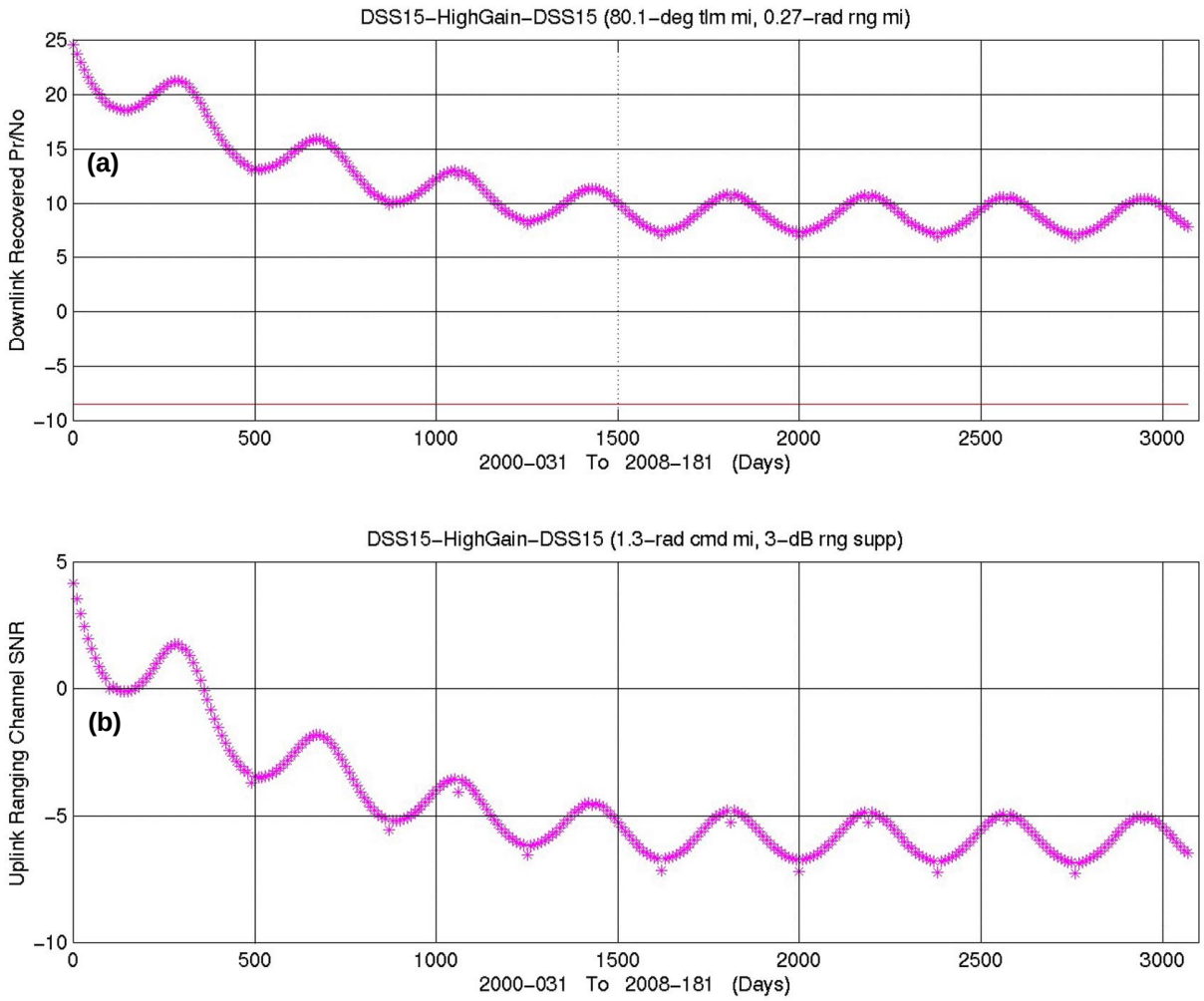


**Fig. 5-9. HGA X-band ranging with 34-m HEF station (February 2000–July 2008): (a) downlink ranging $P_r/N_0$ and (b) uplink ranging signal-to-noise ratio.**

# Section 6

# Operational Scenarios

These scenarios address the use of the X-band telecom system functions (command, telemetry, and radio metric data with the DSN*) only.

## 6.1 DSN Coverage and General Configuration

Cassini tracking is through the 34-m BWG, 34-m HEF, or 70-m net as determined by Cassini antenna selection, off-Earth pointing angle, and required communications rates. X-band uplinks from launch through July 2000 were via the 4-kW transmitter at the 34-m BWG stations or the 20-kW transmitter at the 34-m HEF stations. For the 70-m stations, a 20-kW X-band transmitter became operational at DSS-14 in July 2000, at DSS-43 in November 2000, and at DSS-63 in October 2001. The addition of these transmitters was driven by Cassini's need to communicate via LGA at Saturn.

The normal telemetry downlink is (15,1/6) convolutionally coded.

## 6.2 Launch

Cassini launched on October 15, 1997, in the tenth day of the primary opportunity. A "discrete" command from the Centaur upper stage activated the Cassini "PREP" subsequence. PREP turned on the transponder X-band exciter and the X-band TWTAs, and selected the correct LGA for the launch day. PREP would select LGA2 for launches early in the primary period. After turn-on, the TWTAs required about 5 min to warm up. The AACS gained control over spacecraft pointing and oriented the HGA toward the sun. The spacecraft was then in a safe configuration not requiring further ground intervention for up to 10 days.

*Look up this and other abbreviations and acronyms in the list that begins on page 66.

The telecom system was required to complete the initial acquisition of the DSN X-band uplink within 30 minutes after spacecraft separation from the Centaur, provided that the orbiter was correctly pointed. In order to meet this requirement, the following had to take place.

- Spacecraft in view of the transmitting DSN station
- RFS receiver performing according to its functional requirements [12]
- Onboard AACS correctly pointed the spacecraft so it could receive the uplink signal
- Onboard CDS correctly selected (through WTS actuation) the antenna (RFS input port).

The initial acquisition was accomplished by the Canberra tracking station. During the initial acquisition pass, Cassini communicated via LGA2, with the transponder in the coherent mode (TWNC turned off). The spacecraft activated an onboard sequence to set the uplink rate to 62.5 b/s, the downlink rate to 948 b/s, the telemetry modulation index to 73 deg, the telemetry subcarrier to low with (7,1/2) coding, and the ranging modulation index to high. As of October 20 (launch + 5 days) the USO was on and has been operating normally since.

## 6.3 Inner Cruise-LGA Only

Major events of the inner cruise included three gravity-assist flybys.

| | | |
|---|---|---|
| • Venus 1 flyby | April 26, 1998 | 284 km altitude |
| • Solar opposition | January 9, 1999 | 25-day HGA window |
| • Venus 2 flyby | June 24, 1999 | 603 km altitude |
| • Earth flyby | August 18, 1999 | 1175 km altitude |
| • Solar opposition | September 13, 1999 | 4-day HGA window. |

The original mission plan was to take no major science data during inner cruise. However, Cassini operated some of the science instruments at the two Venus flybys and the Earth flyby [22]. The first instrument, the cosmic dust analyzer (CDA), was turned on during inner cruise and has been collecting cosmic dust most of the time since then (through 2001). At the first Venus flyby, the radio and plasma wave science instrument (RPWS) searched for lightning in Venus' atmosphere, and the radar instrument was activated to test a bounced signal off Venus' surface.

The inner cruise activities included a combination of calibration and science collection. The Venus data was played back relatively slowly but the Earth data was dumped at rates as high as 248.85 kb/s. Inner cruise included the 25-day instrument checkout sequence in December 1998 and January 1999, during the period the HGA could be pointed at the Earth.[1] All 12 orbiter instruments performed a series of individual and coordinated activities to verify instrument functionality and potential intersystem "crosstalk."

[1] Generally the HGA was required to be Sun-pointed until the start of outer cruise, when the spacecraft was 2.7 AU away from the Sun. However, when the Earth-spacecraft-Sun angle was less than 2 deg, the HGA could be Earth-pointed and still perform its sunshade function.

When the HGA could not be Earth-pointed, LGAs were used for communications. The LGA presented some mission-planning constraints. The DSN can always acquire two-way Doppler data whenever the downlink is in lock. However, ranging modulation competes with telemetry data for downlink RF power. Navigation requires Doppler and ranging data from both a northern and a southern DSS on a schedule dependent on when trajectory correction maneuvers must occur. Spacecraft analysis requires engineering telemetry data at least once per week. Most often the link capability for LGA telemetry resulted in the RTE-40 mode (40 b/s of real time engineering data downlinked).

Continuous DSN coverage began at the Venus 2 flyby and continued through Earth flyby, dropping to one pass every 2 days a week after Earth flyby, then tapering to one pass per week. The Cassini project was required to continuously guarantee a probability of less than one in a million of inadvertent reentry of the spacecraft at Earth.

Transitions between LGA1 and LGA2 are based on which antenna has the higher gain given a particular geometry. The transitions occur near a Sun-spacecraft-Earth angle of about 44 deg, with LGA1 favored at less than 44 deg. LGA2 was selected from Venus flyby to Earth closest approach. The command rate used throughout inner cruise was 62.5 b/s. The minimum telemetry rate was 40 b/s. At the worst combination of range and LGA offpoint angle, the telemetry link required both a 70-m station and having the ranging modulation off.

## 6.4 Outer Cruise and Space Science–HGA

Major events of the outer cruise include

| | | |
|---|---|---|
| • HGA constraint ends | February 1, 2000 | HGA can be continuously Earth-pointed |
| • First solar conjunction | May 13, 2000 | |
| • Jupiter flyby | December 30, 2000 | 137 Jupiter radii, speed 11.6 km/s |
| • GWE system test #1 | May 1, 2001 | 7 days duration |
| • RS conjunction test | June 7, 2001 | 9 days duration |
| • GWE system test #2 | August 18, 2001 | 9 days duration |
| • GWE #1 | December 16, 2001 | Opposition ±20 days |
| • RS conjunction experiment #1 | June 21, 2002 | Conjunction ±15 days |
| • Begin space science phase | July 2, 2002 | SOI minus 2 yr |
| • GWE #2 | December 27, 2002 | Opposition ±20 days |
| • RS conjunction experiment #2 | July 1, 2002 | Conjunction ±15 days |
| • GWE #3 | January 4, 2004 | Opposition ±20 days |

- Begin approach science phase ~ January 25, 2004 at completion of GWE
- Phoebe flyby June 12, 2004.

DSN coverage requirements for Jupiter flyby were two passes every 5 days beginning 45 days out, increasing to a pass every 40 hours 20 days out, and continuing through the flyby. An intensive Jupiter science campaign began in October, 2000 and continued into 2001.

In outer cruise, the primary antenna is the HGA. Ranging modulation index was set to the low value, 12.25 deg. During the quiet cruise subphase from Jupiter flyby to the space science phase, low-level science, routine maintenance, engineering, and navigation functions are carried out. The period also includes several radio science activities: two GWE system tests, one solar conjunction experiment test, one GWE and one solar conjunction experiment.

Each 40-day duration GWE[2] requires a maximum of spacecraft stability, to minimize Doppler disturbances. Attitude control is by reaction wheels only (with no reaction wheel unloads) and all other science instruments must remain mechanically "quiet". It is scheduled at solar opposition to minimize solar effects. Tracking 24 hours per day is required, with DSS-25 at Goldstone collecting coherent X-band and Ka-band. Canberra and Madrid do only X-band. Data collection will be done with both the closed loop and open loop receivers.

The 30-day duration conjunction experiment requires X-band uplink with (a) S-band and X-band downlink when the Sun-Earth-probe[3] (SEP) angle exceeds 2 deg, and (b) X-band and Ka-band downlink when SEP angle is 2 deg or less. The primary data quantity is Doppler. Attitude control is on reaction wheels.

During the space science subphase from SOI-2 years to SOI-6 months, there will be two more GWEs and a second conjunction experiment. The third GWE test is expected to be done while using the (7,1/2) convolutional code due to conflicts over the MCD3 with Mars projects.

At the completion of the third and final GWE, the approach subphase will begin. This marks the beginning of tour-like science data collection with one downlink pass per day and the X-TWTA being cycled to standby in-between downlinks.

As of the posting of this article in January 2002, the best source of general information about the progress of the outer cruise mission phase is the Cassini public Website[4] [2, 23].

## 6.5 Saturn Arrival and Tour

Major events of this primary mission phase include

- Saturn arrival (SOI) July 1, 2004 required delta-V = 266 m/s

[2] See http://www.jpl.nasa.gov/releases/2001/release_2001_227.html for more information on the GWE plans.

[3] The term "SEP angle" is a common alternative expression for "solar elongation" in describing the angle between the center of the Sun and the direction of the spacecraft as seen from a station on the Earth. The word "probe" has been used instead of spacecraft so it could be abbreviated to P, to distinguish it from the Sun, abbreviated to S. In this "SEP angle" context only, "probe" does not refer to the Huygens probe.

[4] The on-line press archive (http://www.jpl.nasa.gov/cassini/english/press/archives01.html ) has information about mission activities, including those in 2000 and 2001. The *Cassini-Huygens Journal* [2d] also contains good summaries of the science activities for earlier years.

| | | |
|---|---|---|
| • Fifth solar conjunction | July 8, 2004 | affects SOI tracking (Doppler data) |
| • Huygens Probe separation | November 6, 2004 | |
| • Huygens Probe entry | November 27, 2004 | first Titan flyby by orbiter |
| • End of prime mission | June 30, 2008 | SOI + 4 years. |

The SOI burn[5] is made hours after the spacecraft has been turned off the Earth line (to protect the spacecraft for the ring-plane crossing) and therefore no Doppler tracking coverage of the burn is possible. In addition, tracking is degraded near the time of solar conjunction (minimum SEP angle one week after SOI). The X-band Doppler is considered unreliable when the SEP angle is less than 5 deg, and it is considered unacceptable for navigation purposes when the SEP is less than 3 deg. After the post-SOI turn back to Earth, the recorded data will be played back from the solid-state recorders (SSR).

Reducing the downlink rate to 1896 b/s for SEPs less than 3 deg is expected to provide enough margin to maintain the downlink during the yearly conjunction.

The Saturn tour is divided into successive orbits of Titan. The design of the tour has undergone numerous changes. A representative design, named 18-5, includes orbits ranging from 101 days to as short as 7 days. Each orbit has been arbitrarily divided into low-activity and high-activity periods, with approximately one quarter of the orbit being high-activity. The **high-activity** period is the period closest to Titan and Saturn, and the **low-activity** period is the remainder of the orbit. Targeted satellite flybys and Saturn periapsis observations occur during the high-activity period. High-activity periods would require use of a 70-m station or an array of a 70-m and a 34-HEF, with no ranging allowed. Low-activity periods would allow use of 34-m HEF or 34-m BWG stations, with ranging allowed. The nominal plan is to play back data for 9 h each day with the requirement being to return 1 Gb of science data on low-activity days and 4 Gb of science data on high-activity days. Additional passes would be needed for radio science. Longer passes will be needed to accommodate maneuvers because they occur during passes and interrupt the playback for over an hour. Most passes will be over Goldstone or Madrid (northern hemisphere) because Saturn's declination produced lower elevation angles and short view periods at Canberra.

During the tour, expected data rates are between 14 kb/s and 166 kb/s. This is based on using a 90% link confidence factor, and assuming the two-way coherent mode. These values are a function of ground station size, the changing Saturn-Earth range, and the changing declination of Saturn as seen from the Earth. Pre-launch, Cassini planned a dual data rate strategy for Saturn orbital operations. In this plan, the spacecraft would transmit a lower data rate during the low-elevation-angle portions of the pass, and a higher data rate during the middle of the pass. The lower rate would be present for about 1/3 of the pass, and the higher rate for 2/3 of the pass. Subsequently the plan has been extended to a three-data-rates/pass strategy. As compared with the more usual single-rate/pass plans, these strategies are more complex for both the DSN and the flight team. In return, they increase the bits-to-ground relative to a single rate. During initial

[5] The cover art of this article is a computer-aided drawing of the first moments of SOI burn.

station lockup and data rate changes, loss of valuable data can be mitigated by pausing the playback pointer. This will be a new feature in the version of CDS software that is planned for installation in 2002.

**Radar operations during Titan flyby.** The radar is a science instrument. The following outline of the radar experiment is included because the instrument uses the communications system's HGA.

During the tour phase of the mission (the phase during which the science observations will be obtained) the Cassini spacecraft will make numerous flybys of Titan at distances ranging from 950 to 3000 km.

As the spacecraft approaches Titan the radar sequence (counting down) is as follows:

1) At 100,000 km from Titan, the radar is turned on and the spacecraft begins a slow scan of Titan's surface using the "radiometer-only" mode of operation.
2) At around 25,000 km, the spacecraft is again rotated to point the HGA at the disk of Titan, after it has performed a calibration of the radiometer by pointing the HGA at "cold sky."
3) At around 22,000 km, the radar begins its active transmit/receive activity, with the instrument operating as a scatterometer. In this mode, surface roughness can be assessed from the backscatter signals (i.e., echoes) bounced back to the instrument. During this phase and subsequent ones, radiometry is also operating to measure the radio-frequency thermal signals emanating from Titan itself.
4) At about 9,000 km, the antenna is aimed straight down toward the surface point on Titan closest to the spacecraft, sometimes called the "nadir point." The measurement is of the distance between the nadir point and the spacecraft, which, when combined with the navigation measurement of the spacecraft position, yields the terrain height of Titan
5) At about 4,000 km, side-looking imaging radar is used to obtain detailed images of the surface under study. This then continues through the point of closest approach to Titan and 4,000 km beyond. The sequence of events reverses as the spacecraft recedes.

## 6.6 Safing

When onboard fault protection executes the safing algorithm, it switches uplink and downlink X-band communications to the selected safing antenna.[6] If LGA2 is selected the coding rate is set to (7,1/2). Otherwise, the coding rate is set to (15,1/6). Ranging is turned off to maximize the link margin. The AACS will turn the spacecraft so that the HGA and LGA1 are pointed to a specified target, either the Sun or the Earth. During inner cruise, the Sun was the required target due to thermal issues, but the Earth may be chosen at a later time. Fault protec-

[6] A flag in the flight software determines which antenna the safing algorithm selects. The flag is changed by ground command as needed. For example, during inner cruise LGA2 had the more favorable geometry relative to Earth and would have been selected.

tion changes the uplink rate to 7.8125 b/s, which requires the minimum link margin and therefore maximizes the allowable off-Earth pointing angle. For 7.8125 b/s, the uplink command modulation index is 0.8 rad.

Through August 2000, the safing downlink rate was 40 b/s with a 55-deg modulation index. After that date, the safing downlink rate became 20 b/s with a 47-deg telemetry modulation index.

Still later on in the mission, the safing downlink rate will become 10 b/s, then 5 b/s as the spacecraft travels even further away from Earth. At Saturn range, 70-m uplink and downlink will be required to communicate with Cassini when safed. Cassini safemode was a driver for the installation of X-band transmitters in the 70-m stations [22].

## Section 7

# Lessons Learned

**No does not mean no.** The mission plan said no science during cruise but science crept out of the box during the first Venus flyby and has been on the loose ever since. The by-product has been more complicated sequence planning to accommodate science data taking and playbacks and has increased the number of DSN* passes required, while staffing levels were not increased accordingly.

**Faster is better.** The only low-rate playback mode in the original plan for launch was PB&RTE 40 (playback and real-time engineering at 40 b/s where about 20 b/s was real time and about 20 b/s was playback). A change request was put in to add PB&RTE 200 (about 180 b/s of playback) and PB&RTE 948 (about 928 b/s of playback) telemetry modes in time for launch. The new modes ended up being far more heavily used than the PB&RTE 40.

**Just because it is in 810-5[1] does not always mean it exists.** One of the inner cruise ranging link configurations assumed 12 dB uplink ranging suppression. The first attempt at this configuration showed it was not possible. After a couple of tests, a fallback position of 6 dB was adopted. The difference was only 1 dB of $P_r/N_0$.

**Two is not always better than one.** Another ranging configuration was to do three-way ranging using a 34-m HEF for uplink and a 70-m for downlink. Navigation determined that there was a bias in the three-way ranging and that ranging with just a HEF was good enough.

**A good attitude helps everybody.**

- The inner cruise LGA2 links were designed to accommodate the possible need to roll ±15 deg to acquire inertial reference. This proved to be far too conservative as the only

[1] "810-5" is the JPL document number of the predecessor to [20]. The predecessor document [18] had been used to establish station configuration and station equipment performance for the Cassini mission.

*Look up this and other abbreviations and acronyms in the list that begins on page 66.

time, so far, that inertial reference needed to be acquired was just after launch. This was only a concern on LGA2 since LGA1 and the HGA are roll-symmetric

- The overall pointing requirement for the calibrated HGA is 4 mrad (0.115 deg). The original assumption was that it would take a ±1-mrad deadband to meet the requirement. However, the combined navigation and attitude control uncertainties have been small enough that a ±2-mrad deadband meets the requirement. Being able to maintain a good link with a slightly wider deadband uses less thruster valve cycles and hydrazine.

**Good alignment is a wonderful thing.** The initial X-band and Ka-band electrical boresight calibration showed that the boresight was only 0.64 mrad (0.037 deg) away from the –z axis.

**Check the polarization.** The Ka-band uplink path is LCP but DSS-25 Ka-band transmit path was built as RCP.

**Put all your configurations into the link prediction software before you launch.** Otherwise somebody is bound to ask you a question you can't answer.

**If a telemetry mode exists, it will be used.** The SAF_248850 (248.85 kb/s) and SAF_142200 (142.2 kb/s) telemetry modes were put in CDS to aid data collection during the assembly, test, and launch operations (ATLO) phase. The modes were named SAF for Spacecraft Assembly Facility where they were to be used. The highest downlink rate planned for use in flight was RTE & SPB 14220 (real-time engineering and science playback at 14.22 kb/s). However, it was later realized that 248.85 kb/s was achievable during inner cruise HGA opportunities and Earth flyby.

**Test it in-flight AND don't forget the Doppler.** There were no end-to-end tests planned in-flight with the probe, only internal checkouts. A test was scheduled in February 2000 with a simulated probe link coming from DSS-24. Analysis of the test data showed that the bit synchronizer in the probe receiver would not be able to handle the predicted mission Doppler. Many ground tests, spacecraft tests, teleconferences, and meetings later, a mission redesign was announced that is expected to successfully return the Huygens-Cassini relay data through the as-flown relay receivers [16,17].

# References


[1] PD 699-257, *Cassini Telecommunications Link Design Control Doc*ument, Andre Makovsky, July 26, 1996

[2] *Cassini-Huygens public homepage*, http://www.jpl.nasa.gov/cassini/ Accessed February 2002.

[3] *Cassini document map* (internal Cassini website; requires user name and password), https://cassini.jpl.nasa.gov/cel/cedr/doc-tree/doc_map.html Accessed February 2002.

[4] *Capsule summary*, Charles Kohlhase, http://www.jpl.nasa.gov/cassini/Summary/ Accessed February 2002.

[5] CAS-3-210, *Temperature control requirements* (internal Cassini website; requires user name and password), https://cassini.jpl.nasa.gov/celbin/GET?document:DC000351 Accessed February 2002.

[6] *Spacecraft communications functions*, http://www.jpl.nasa.gov/cassini/Spacecraft/comm.html Accessed February 2002.

[7] CAS-3-300, *Telecommunications requirements* (internal Cassini website; requires user name and password), https://cassini.jpl.nasa.gov/celbin/GET?document:DC000362 Accessed February 2002.

[8] CAS-3-330, *Fault Protection requirements* (internal Cassini website; requires user name and password), https://cassini.jpl.nasa.gov/celbin/GET?document:DC000364 Accessed February 2002.

[9] CAS-3-100, *Orbiter system requirements* (internal Cassini website; requires user name and password), https://cassini.jpl.nasa.gov/celbin/GET?document:DC000336 Accessed February 2002.

[10] PD 699-080, *Cassini Orbiter/Huygens Probe interface document* (internal Cassini website; requires user name and password), https://cassini.jpl.nasa.gov/cel/inv/document/pdl_document/project/699-080/pdf/document.pdf Accessed February 2002.

[11] CAS-4-2017, *Antenna subsystem (Ant) requirements* (internal Cassini website; requires user name and password), https://cassini.jpl.nasa.gov/celbin/GET?document:DC000262 Accessed February 2002.

[12] CAS-4-2002, *Radio frequency subsystem (RFS) requirements* (internal Cassini website; requires user name and password), (Rev. A) https://cassini.jpl.nasa.gov/celbin/GET?document:DC000253 Accessed February 2002.

[13] PD 699-100, *Cassini Mission Plan (Rev. L)*, July 10, 2000

[14] CAS-4-2018, *Radio frequency instrument subsystem (RFIS) requirements* (internal Cassini website; requires user name and password), https://cassini.jpl.nasa.gov/celbin/GET?document:DC000263 Accessed February 2002.

[15] ESA-JPL-HUY-25999, *Cassini-Huygens Integrated Data Link Report*, November 11, 1997

[16] *ESA and NASA agree a new mission scenario for Cassini-Huygens*, June 29, 2001, http://sci.esa.int/content/news/index.cfm?aid=12&cid=35&oid=27650 Accessed February 2002.

[17] *Huygens passes communications test with flying colours*, November 27, 2001, http://sci.esa.int/content/news/index.cfm?aid=12&cid=35&oid=29045 Accessed February 2002.

[18] R. Sniffin,[1] *Deep Space Network/Flight Project Interface Design Handbook, Volume I: Existing DSN Capabilities*, JPL 810-5, Rev. D, Jet Propulsion Laboratory, Pasadena, California, September 15, 1991, also available at JPL internal web site http://block.jpl.nasa.gov/810-5/810-5.html Accessed October 2001.

[19] J. Taylor, M. Muñoz Fernández, A. I. Bolea-Alamañac, and K. Cheung, "Deep Space 1 Telecommunications," *Descanso Design and Performance Summary Series*, http://descanso.jpl.nasa.gov/index_ext.html Accessed February 2002.

[20] *DSMS Telecommunications Link Design Handboo*k, 810-005, Rev. E, http://eis/deep-space/ dsndocs/810-005/ Accessed July 2001.

[21] Tong, K. K. and R. H. Tung, A *Multimission Deep-Space Telecommunications Analysis Tool: The Telecom Forecaster Predictor*, TDA PR 42-140, October–December 1999, pp. 1–7, Feb. 15, 2000, http://tmo.jpl.nasa.gov/tmo/progress_report/article_index.html)

[22] *Cassini-Huygens Journal* (October 1998 and December 1999 issues), http://www.jpl.nasa.gov/cassini/MoreInfo/newslets/ Accessed February 2002.

[23] *News archives (year 2001)*, http://www.jpl.nasa.gov/cassini/english/press/archives01.html Accessed February 2002.

[1] There are two versions of the tracking-station-interface document, with Rev. D [20] applicable through most of the Cassini mission. Rev. D of 810-5 is dated February 15, 1975 (with later individual release dates of many individual modules). The document was superseded and renamed 810-005 (Rev. E) [22], January 15, 2001.

# Abbreviations and Acronyms

| | |
|---|---|
| **AACS** | attitude and articulation control subsystem |
| **ACE** | net callsign for real time mission controller |
| **Adv** | adverse |
| **AGC** | automatic gain control |
| **AMMOS** | Advanced Multimission Operations System |
| **ANT** | antenna subsystem |
| **ASI** | Italian Space Agency (Agenzia Spaziale Italiana) |
| **ATLO** | assembly, test, and launch operations |
| **AU** | astronomical unit |
| **Aux Osc** | auxiliary oscillator |
| **AZ** | azimuth |
| **B2MCD** | Block 2 MCD |
| **B3MCD** | Block 3 MCD |
| **BER** | bit-error rate |
| **BPF** | bandpass filter |
| **b/s** | bits per second |
| **BVR** | Block V Receiver |
| **BWG** | beam waveguide |
| **CAPS** | Cassini plasma spectrometer |
| **CAS** | Cassini |
| **CD** | cumulative distribution |
| **CDA** | cosmic dust analyzer |
| **CDS** | command and data subsystem |
| **CDU** | command detector unit |
| **Clk** | clock |
| **Cmd** | command |
| **CNR** | carrier-to-noise ratio |
| **Conv** | convolutional |
| **CSS** | channel select synthesizer |
| **dB** | decibel |
| **dBi** | decibel with respect to isotropic |
| **DCC** | downlink channel controller |

| | |
|---|---|
| **DCT** | design control table |
| **DESCANSO** | Deep Space Communications and Navigation Systems Center of Excellence |
| **DIG** | digitizer assembly |
| **DKF** | DSN keywords file |
| **DL** | downlink |
| **DOFF** | degrees offset |
| **DOR** | differential one-way ranging |
| **DS1** | Deep Space 1 |
| **DSCC** | Deep Space Communications Complex |
| **DSMS** | Deep Space Mission System |
| **DSN** | Deep Space Network |
| **DSP-R** | digital signal processor-recorder |
| **DSS** | Deep Space Station |
| **DST** | deep space transponder |
| **DTT** | downlink telemetry and tracking subsystem |
| $E_b/N_0$ | ratio of energy per bit to noise spectral density |
| **EIRP** | effective isotropic radiated power |
| **EL** | elevation |
| **EOM** | end of mission |
| **ESA** | European Space Agency |
| **F1** | reference frequency in DST |
| **Fav** | favorable |
| **FTS** | frequency and timing subsystem |
| **GCF** | ground communications facility |
| **GHz** | gigahertz |
| **GWE** | Gravitational Wave Experiment |
| **HEF** | high efficiency |
| **HEMT** | high-electron-mobility transistor |
| **HGA** | high-gain antenna |
| **IDC** | intermediate-frequency-to-digital converter |
| **IF** | intermediate frequency |
| **IPN-ISD** | InterPlanetary Network and Information Systems Directorate |
| **ISS** | imaging science subsystem |
| **JPL** | Jet Propulsion Laboratory |
| **Ka-band** | RF band between 26.5 and 40 GHz |
| **KAT** | Ka-band translator |
| **KEX** | Ka-band exciter |
| **Ku-band** | RF band between 10 and 26.5 GHz |

| | |
|---|---|
| **KUPL** | Ka-band uplink subsystem |
| **kW** | kilowatts |
| **LCP** | left circular polarization |
| **LGA** | low-gain antenna |
| **LNA** | low-noise amplifier |
| **MAG** | magnetometer |
| **MCD3** | maximum-likelihood convolutional decoder (Block 3) |
| **MDA** | metric data assembly |
| **MHz** | megahertz |
| **mrad** | milliradians |
| **MSA** | mission support area |
| **N/A** | not applicable |
| **NASA** | National Aeronautics and Space Administration |
| **NAV** | navigation subsystem |
| **NMC** | network monitor and control |
| **NRZ-L** | nonreturn to zero-level |
| **NSP** | network simplification plan |
| **OpNav** | optical navigation |
| **OWLT** | one-way light time |
| **PB&RTE** | playback and real-time engineering |
| **PCG** | phase calibration generator |
| $P_c/N_0$ | ratio of carrier power to noise spectral density |
| **PCM** | pulse-code modulation |
| **PLL** | phase-locked loop |
| **Pnt** | pointing |
| $P_r/N_0$ | ratio of ranging power to noise spectral density |
| **PSA** | probe support avionics |
| **PSK** | phase-shift key |
| $P_t/N_0$ | total power-to-noise spectral density ratio |
| **PTS** | precision telemetry simulator |
| **RCP** | right circular polarization |
| **RF** | radio frequency |
| **RFE** | receiver front end |
| **RFIS** | radio frequency instrument subsystem |
| **RFS** | radio frequency subsystem |
| **RID** | radio-frequency to intermediate-frequency downconverter |
| **RMDC** | radio metric data conditioning |
| **Rng** | ranging |

| | |
|---|---|
| **RNS** | reliable network service |
| **RPS** | radio and plasma science (instrument) |
| **RRP** | receiver ranging processor |
| **RS** | Reed-Solomon |
| **RSR** | radio science receiver |
| **R/T** | real time |
| **RTE&SPB** | real-time engineering and science playback |
| **RUSO** | receive ultra stable oscillator |
| **SAF** | Spacecraft Assembly Facility |
| **S-band** | RF band between 1.55 and 5.2 GHz |
| **SBT** | S-band transmitter |
| **S/C** | spacecraft |
| **SEG** | sequence of events generator |
| **SEP** | Sun–Earth–probe angle |
| **SNT** | system-noise temperature |
| **SOE** | sequence of events |
| **SOI** | Saturn orbit insertion |
| **SPC** | signal processing center |
| **SRA** | sequential ranging assembly |
| **SRU** | stellar reference unit |
| **SSR** | solid-state recorder |
| **TCU** | telemetry control unit |
| **TDDS** | tracking-data delivery system |
| **TFP** | telecom forecaster predictor |
| **Tlm** | telemetry |
| **TUSO** | transmit ultra-stable oscillator |
| **TWTA** | traveling-wave tube amplifier |
| **Tx** | transmitter |
| **TWNC** | two-way non-coherent |
| **UL** | uplink |
| **UPA** | uplink processor assembly |
| **UPL** | uplink subsystem |
| **URA** | uplink ranging assembly |
| **USO** | ultra-stable oscillator |
| **UTC** | Universal Time Coordinated |
| **UVIS** | ultraviolet imaging spectrograph |
| **Var** | variance (math) |
| **VCO** | voltage-controlled oscillator |

| | |
|---|---|
| **VIMS** | visible and infrared mapping spectrometer |
| **WTS** | waveguide transfer switch |
| **X-band** | RF band between 5.2 and 10.0 GHz |
| **XTR** | X-band transmit receive |